Smart Energy & Power Quality Solutions

Catalogue 2018 | Issue July

POWER – SIMPLY SAVE

3in1

Energy management, power quality monitoring and analysis,
ground fault monitoring (RCM)

ams® Automatisc he Mess- und Steuerungst echnik GmbH

General Information — Pages 01/...

01

Energy management systemes 4
UMG selection schematic 14

Energy and power quality measurement products — Pages 02/...

02

Measurement devices for DIN rail:
UMG 103-CBM 6 · UMG 104 12 · UMG 20CM 18
UMG 604-PRO 26 · UMG 605-PRO 34

Measurement devices for front panel installation:
UMG 96L / UMG 96 42 · UMG 96RM 48 · UMG 96RM-E 56
UMG 96-PA 64 · UMG 508 72 · UMG 509-PRO 78
UMG 511 84 · UMG 512-PRO 94

Mobile ower quality analysers:
MRG 96RM-E RCM Flex / MRG 512-PRO PQ Flex 104

Energy management — Pages 03/...

03

ProData® data logger 2
Field bus modules series FBM 8

Software and IT solutions — Pages 04/...

04

Janitza Software and IT solutions 2
Programming language Jasic ® 20
Measuring devices - Homepage 35
OPC UA Server 40
System software GridVis ® 4
APPs – expansion with know-how 24
Cloud-solution for energy management – www.Energy-Portal.com 36
Database server 42

6 12 18 26 42 48 64 72 78 84 94 104

UMG 103-CBM

UMG 104

UMG 20CM

UMG 604-PRO
UMG 605-PRO

UMG 96L
UMG 96

UMG 96RM
UMG 96RM-E

UMG 96-PA

UMG 508

UMG 509-PRO

UMG 511

UMG 512-PRO

MRG 96RM-E RCM Flex
MRB 512 PQ Flex

2 8

ProData® Datenlogger

FBM Module

ENERGY MEASUREMENT TECHNOLOGY WITH VISION

ONE SYSTEM – THREEFOLD BENEFITS

Energy management, power quality monitoring and residual current monitoring in a single system environment. That is what the comprehensive Janitza product range stands for. The software and hardware components are optimally tailored to one another. Profit from our total competence and comprehensive services across the entire product life cycle.

Further information on our products, software solutions and services, as well as interesting practical examples, can be found on our website www.janitza.com. We look forward to hearing from you!

3in1

MADE IN GERMANY

Janitza GridVis®
Network visualisation software

Janitza energy measurement devices

1. Energy management (per DIN EN ISO 50001)

- Reduces CO_2 emissions
- Reduces energy costs
- Improves energy efficiency

2. Power quality monitoring

- High-availability power supply
- Reduces downtimes
- Optimises maintenance

3. Residual current monitoring / fault current monitoring (RCM)

- Minimum effort for DGUV V3
- Improves supply reliability
- Identifies insulation faults faster
- Improves fire protection

Energy management DIN EN ISO 50001

Power quality DIN EN 50160

Residual current monitoring (RCM)

Energy management
DIN EN ISO 50001

ENERGY MANAGEMENT SYSTEMS

The reduction in energy costs can be a significant competitive factor, because in many industry sectors the energy costs constitute a relevant item on the company results. In this regard, the ISO 50001 standard aims to establish the framework conditions for an operational energy management system. Energy flows must be made transparent and they must be analysed, in order to sustainably save costs and decisively reduce energy consumptions and CO_2 emissions. It is also possible to identify problems in the energy supply with an energy management system.

In response to these requirements, Janitza has developed the ISO 50001-certified GridVis® software. The software offers the user the tool required for establishing an efficient, manageable and consistent energy management system. In this way, measures can be developed for the improvement of the energy efficiency of processes, systems and devices with the help of the measured data provided. The effect of the implemented measures is continuously monitored by the energy monitoring system, the results are verified for example with the help of key figures (KPIs) and quantity flow diagrams (Sankey).

- Energy management systems increase the (energy) efficiency of processes, systems and devices (ISO 50001, VDE 0100-801):
- Continuous energy monitoring helps with the rapid identification of significant deviations in the power supply. Furthermore, this monitoring also supports fulfilment of the taxation and regulatory aspects (German law on renewable energy sources, peak balancing per German electricity tax law, etc.).
- Through transparent energy flows it is possible to reduce the costs, minimise maintenance outlay and identify energy-intensive consumer devices:
- The visible reduction of energy consumptions and CO_2 emissions makes a contribution to environmental protection:
- MID-compliant devices from Janitza can be used in combination with GridVis® software for cause-related cost centre management. MID is a measuring instruments directive of the European Parliament, which includes such requirements as manipulation security and therefore provides legal certainty.

GridVis® KPI example – key figures are an important instrument for the energy manager

Power quality
DIN EN 50160

POWER QUALITY

System assurance and highly-availability power supply
Continuous monitoring of the power quality in all technical systems per IEC 61000-2-4 is essential, in order to avoid unnecessary repair costs and production downtimes.

The voltage in the grid nowadays is far removed from the ideal sinusoidal waveform. Voltage interruptions, transients, harmonics, flickers or start-up currents: Various different "grid feedback effects" change the sinusoidal character of the currents and thus also the power quality. Impermissible electrical loading and increased thermal losses are then a daily occurrence. This can result in the equipment operating in a restricted manner or its service life being adversely affected. This risks a production failure.

Detect grid feedback effects promptly
Solid power quality management measures the power quality continuously, analyses the acquired data and highlights the central starting points for optimisation. In doing so, it also pursues the objective of reducing maintenance costs. For example, the class A power quality analyser UMG 512-PRO enables the power quality to be monitored in accordance with the established standards, such as EN 50160, IEEE 519 or EN 61000-2-4. In addition, the device also measures flicker and harmonics up to the 63rd harmonic. The UMG 509-PRO also continuously monitors the power quality and provides analysis of electrical disturbances in the event of network problems. On the lower network levels, the UMG 96RM serves to record energy consumers and standard variables, as well as further basic power quality parameters.

PQ reports with the GridVis® monitoring software
With the aid of meaningful reports, Janitza's TÜV-approved software GridVis® delivers sound and comprehensible information on the power quality. The GridVis® reporting system is the heart of the network analysis. The PQ reports provide a rapid overview of any standard and threshold value infringements that arise. Furthermore, they show whether the power quality is adequate or not within the time period in question. The traceability and tracking of the measured values is assured with the GridVis® software. Legal certainty is provided.

GridVis® PQ Heatmap

- Secure, highly-availability power supply
  Assured quality of the electrical energy through continuous monitoring and analysis.
- Avoidance of overload situations
- Avoidance of production stoppages
- Maximisation of operating times
- Ensuring product quality/stable processes
  Production-related quality assurance by monitoring the local power quality.
- Optimisation of the maintenance costs

Residual current monitoring (RCM)

RESIDUAL CURRENT MONITORING (RCM)

Safe – modular – future-oriented

Residual current monitoring (RCM) plays a decisive role in high-availability power supply systems. Constant measurement and early warnings can enable the rapid and direct localisation of faults and insulation problems. This applies in particular to quietly rising residual currents (e.g. triggered by an insulation fault), overly high operating currents and any other overloading of system parts and consumers. This not only protects against risks of fire but also increases the system availability. In this way, it is frequently possible to avoid costly shut-downs through residual current circuit breakers (RCD) and minimise servicing costs. With an electrical system or static operating equipment, complex insulation measurements within the framework of DGUV V3 are superfluous and this results in a significant reduction in testing outlay.

- Early alerts in the event of a possible overload
- Increased system and operational certainty
- Reduction in servicing costs
- Avoiding the risk of fire
- Significant outlay reduction with DGUV V3 testing

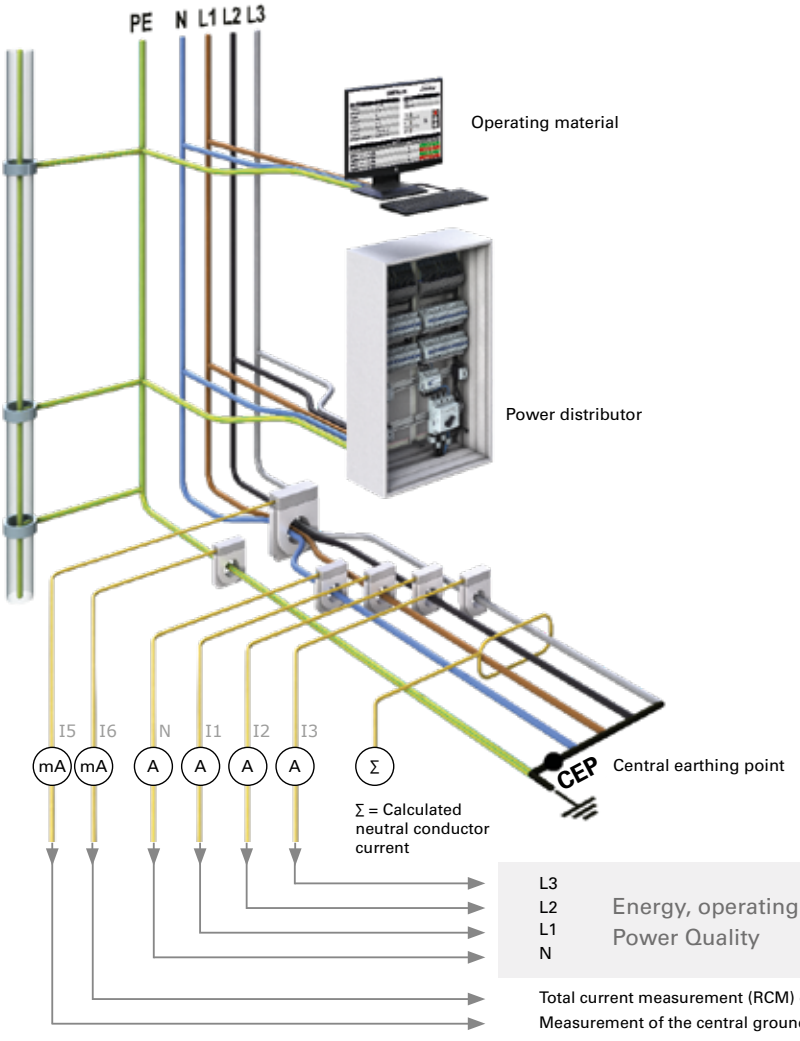

TN-S system (5-conductor network) – Basic precondition for the safe operation of IT equipment, machinery and networked systems including residual current monitoring

GridVis® RCM report

MAXIMUM TRANSPARENCY JANITZA SOFTWARE SOLUTIONS

Janitza GridVis® software, the Janitza APPs and the Janitza energy portal make energy data transparent and therefore form a decision-making basis for implementing measures for the optimisation of energy efficiency and power quality. Energy data can be called up any time and anywhere, online through the GridVis® network visualisation software and the energy portal. The APPs simplify the devices in terms of reading out, processing and visualising the energy data. These can be interrogated via a browser.

The Janitza Cloud solution
The cloud-based **energy portal** saves the customer acquisition and operating costs for software, database, server, and maintenance. It guarantees the highest levels of data security and more than anything else, is simple to use. The system architecture is flexible, scalable and can be individually configured. This enables the optimising of energy efficiency in the company, on the basis of key figures and their progressions – but also the current, gas and water consumption.

GridVis®

Network visualisation software for energy management systems and power quality monitoring

ENERGY-PORTAL

Cloud solution for energy management (SaaS)

APPs

Software expansions with know-how

GridVis®
NETWORK VISUALISATION

Janitza GridVis® version 7.2 is a powerful, user-friendly software solution for the development of **energy, RCM and power quality monitoring systems.** Alongside the programming and configuration of the Janitza measurement devices, the software can also be used for the documentation (reporting), as well as read-out, saving, display, processing and analysis of the measured data. With this, the comprehensive and scalable GridVis® is a software solution for energy suppliers, industrial applications, facility management applications, the building market and infrastructure projects.

Energy saving potentials can be highlighted, energy costs reduced, production downtimes avoided and the utilisation of production resources optimised.

GridVis® highlights

- Configuration of the measurement system and the UMG measurement devices
- Time planning with time period definition for time-controlled alarms, tariff formation and key figures formation
- Generic modbus devices, virtual meters
- Dashboards (individual web page customisation with widgets)
- Dashboard standard templates for GridVis® Energy
- Various widget and dashboard functional expansions for GridVis® Energy
- Automatic read-out of the measuring data from the device memory, alternatively cyclical querying possible through online recording (polling)
- Automatic CSV data import (e.g. for unit quantities, sales figures, energy meters without interface, etc.), e.g. for KPI calculations
- Minimum, average and maximum values can be displayed in a graph
- Real-time data and indicator function
- Manual or time-controlled reports
- PQ reports for freely configurable threshold values, annual assessments per EN50160, Heatmap and assessment functions
- RCM report, designed for the assessment of residual current infringements
- Saving the data in a central database including database management (e.g. MySQL / MS SQL / Janitza DB)
- Key figure evaluation (KPI)
- Sankey diagram (graphical representation of quantity flows)

ENERGY MONITO
MADE IN

Digital integrated measurement devices
Individual, tailored solutions for RCM, energy and power quality measurement technology to meet every requirement

Energy measurement devices

GridVis® network visualisation software
Software for the development of an RCM, energy and power quality monitoring system. Both PC and web-based solutions are available.

GridVis®

Energy-Portal (SaaS)
The Cloud solution for your energy management

Energy portal

APPs
Software-based developments with 'know-how'

APPs

ORING SYSTEMS GERMANY

MADE IN GERMANY

Log energy data, display energy consumption, reduce costs
Nowadays, energy management is not only relevant for the environment and for society but is also a critical competitive factor. Only those who can keep a close eye on their energy consumption can reduce costs and increase efficiency. To ensure optimum use of the measurement devices, Janitza offers the corresponding accessories and tailored software – a complete package that guarantees efficient energy management.

For more information visit our website at www.janitza.com

Current transformer

Current transformers
The link between heavy current and digital technology

Service

Service
Janitza provides support with the selection, maintenance and support of the systems. Our website offers comprehensive information on products, software solutions and services with many practical examples and background information.

Commissioning

Commissioning
Commissioning of the monitoring systems

Training

Training
Training of the personnel

STANDARDISED SPECIFICATIONS

DIN EN 16247-1

Energy audit
- Defines the requirements for an energy audit
- One-off acquisition/analysis of the energy consumption
- Obligation for all non SMEs since 2015

DIN EN ISO 50001

Energy management systems
- Specifications for systematic energy management
- Precondition for the partial release of energy-intensive companies from the German law on renewable energy sources

DIN VDE 0100-801

Energy efficiency in low voltage systems
- Directive for planning energy distribution, also applies for retrofits to older systems
- Prescribes the use of energy measurement technology in all energy distribution systems

DIN VDE 0100-801

Energy efficiency in low voltage distribution systems
- Valid and binding since December 2015
- Electrical and practical supplement to ISO 50001
- Valid for new systems and the updating of older systems
- Measurement, monitoring and control of: Consumptions, load management, power quality, harmonics, voltage drop, optimum load utilisation of transformers (25-50%), reactive power load
- Recording the measured values = Basis for planning expansions

DGUV V3

Operating equipment testing
- Insulation testing: Can be minimised with continuous documentation of the residual currents

EN 50160

Power quality standard for energy suppliers
- "Incoming goods inspection - current"
- Enforceable product liability standard

EN 61000-2-4

Power quality standard within companies
- Threshold values for the loads of electronic components, caused by grid feedback
- Key phrase: Warranty claims

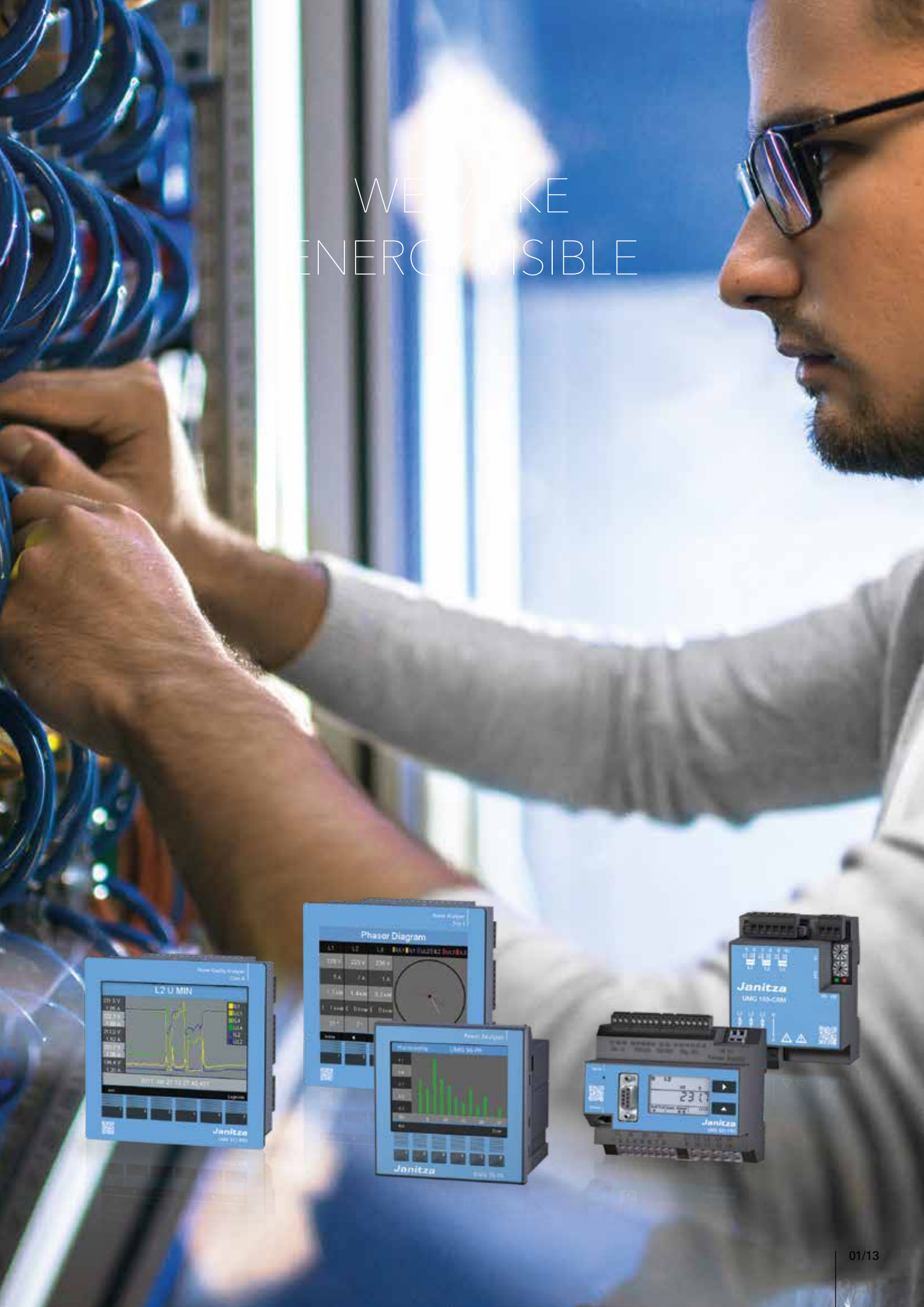
WE MAKE
ENERGY VISIBLE
L2 U MIN
Phasor Diagram
Janitza
UMG 103-CBM

UMG selection assistance

Which measurement device for my task?

PQ Class A
IEC 61000-4-30

No → **RCM**
Residual current monitoring

No →

Yes
Class 0.2

Yes

6 current channels
Ethernet
Modbus
Profibus
Jasic
Homepage
UMG 511

6 current channels
Ethernet
Modbus
Profibus
Jasic
Homepage
UMG 512-PRO

6 current channels
Ethernet
Modbus
Profibus
Jasic
Homepage
UMG 509-PRO

20 current channels
Modbus
UMG 20CM

6 current channels
Ethernet
Modbus
Homepage
UMG 96RM-E

6 current channels
Ethernet
Modbus
Profinet
Jasic
Homepage
UMG 96RM-PN

6 current channels
Ethernet
Modbus
UMG 96-PA
with module

Yes → **MID**
for billing purpose

No → Events, Ethernet, Jasic, Homepage & Gateway

No → With Measured data memory

1-phase or 3-phase

1-phase
MID energy meter
1-phase

3-phase
MID energy meter
3-phase

3-phase
UMG 96-PA
(MID)

Ja

Waveform, Flicker & Klasse S, IEC 61000-4-30

Yes
Ethernet
Modbus
Profibus
Jasic
Homepage
UMG 605-PRO

No
Ethernet
Modbus
Profibus
Jasic
Homepage
JMG 604-PRO

No
Modbus

20 channels
UMG 20CM

Modbus
UMG 103-CBM

Yes
Modbus
Profibus
UMG 104

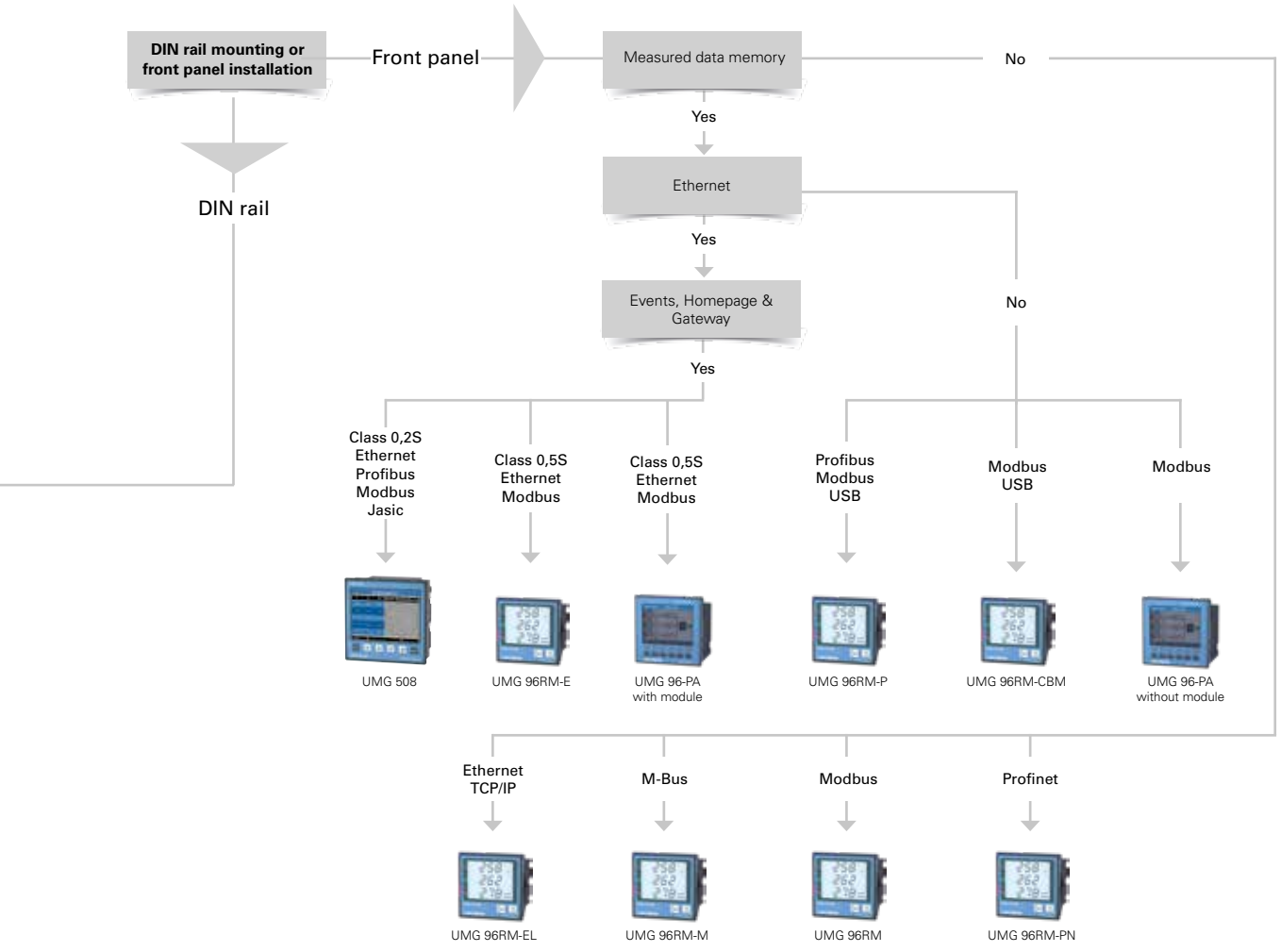
DIN rail mounting or front panel installation
Front panel
DIN rail
Measured data memory
No
Yes
Ethernet
Yes
Events, Homepage & Gateway
Yes
No
Class 0,2S Ethernet Profibus Modbus Jasic
Class 0,5S Ethernet Modbus
Class 0,5S Ethernet Modbus
Profibus Modbus USB
Modbus USB
Modbus
UMG 508
UMG 96RM-E
UMG 96-PA with module
UMG 96RM-P
UMG 96RM-CBM
UMG 96-PA without module
Ethernet TCP/IP
M-Bus
Modbus
Profinet
UMG 96RM-EL
UMG 96RM-M
UMG 96RM
UMG 96RM-PN

02 Energy and power quality measurement products

UMG 103-CBM / UMG 104 — Page 02/6

- Compact universal measurement device for DIN rail mounting without display
- Communication via RS485 Modbus RTU
- Continuous sampling of the voltage and current measurement inputs

UMG 20CM (Branch Circuit Monitoring Device) — Page 02/18

- Operating current and residual current monitoring device (RCM – Residual Current Monitor)
- 20 current and 3 voltage measurement channels
- RS485 interface and Modbus protocol

UMG 604-PRO / UMG 605-PRO — Page 02/26

- Power analyser for DIN rail mounting with Ethernet, Profibus and integrated homepage
- Master device for energy management systems, extensive Power Quality measurements
- Flicker measurement in accordance with DIN EN 61000-4-15 (UMG 605-PRO)

UMG 96L / UMG 96 — Page 02/42

- Integrated universal measurement devices without interface
- Compact construction with low installation depth (96 x 96 x 42 mm)
- Replaces up to 13 analogue measurement devices

UMG 96RM / UMG 96RM-E — Page 02/48

- Compact multifunction measurement device for energy measurement with various interfaces and protocols
- Powerful microprocessor and high sampling rate for maximum measurement accuracy
- Recording of energy data and load profiles for energy management systems (e.g. ISO 50001)

UMG 96-PA — Page 02/64

- Modular energy measurement device
- Four functions – one solution: Energy management, MID, Power Quality and RCM monitoring
- Each 3 digital inputs and outputs as well as an analogue output
- Measurement of current and voltage parameters and RCM measurement

UMG 508 — Page 02/72

- Multifunctional power analyser with Ethernet and BACnet (optional)
- Colour graphical display with intuitive user guidance
- Large measured data memory of 256 MB

UMG 509-PRO — Page 02/78

- High-performance power quality analyser with RCM – Residual Current Monitor
- Fourier analysis 1st to 63rd harmonic
- Continuous measurement with an energy accuracy class of 0,2S

UMG 511 — Page 02/84

- Class A power quality monitoring device (certified per IEC 61000-4-30)
- Acquisition of all power quality parameters, e.g. harmonics up to 63rd, flicker, short-term interruptions, etc.
- Ethernet, integrated homepage, Modbus, Jasic® programing, PQ reporting, BACnet (optional)

UMG 512-PRO — Page 02/94

- Class A power quality monitoring device (certified per IEC 61000-4-30)
- Application as residual current monitoring device (RCM – Residual Current Monitoring)
- Registration of all power quality parameters, e.g. harmonics up to the 63rd, flicker, short interruptions and so on
- Ethernet, integrated Homepage, Modbus, Jasic® programming, PQ reporting, BACnet (optional)

MRG 96RM-E RCM Flex / MRG 512-PRO PQ Flex — Page 02/104

- Mobile energy measurement devices / power quality analysers
- Acquisition and long-term recording of load profiles as well as power quality measured values
- Analyzing of power supplies in accordance with EN 50610 as well as internal networks per EN 61000-2-4.

ENERGY AND POWER QUALITY MEASUREMENT PRODUCTS

EN 50160 / ISO 50001
Made in Germany

Type	UMG 103-CBM	UMG 104		UMG 20CM	UMG 604-PRO		UMG 605-PRO	UMG 96L
			P		E	EP		
Item number	**52.28.001**	**52.20.201**	**52.20.202**	**14.01.625**	**52.16.202**	**52.16.201**	**52.16.227**	**52.14.001**
Network voltages								
Rated voltage L-N, AC	277 V	277 V		277 V	277 V		277 V	255 V*2
Rated voltage L-L, AC	480 V	480 V		480 V	480 V		480 V	442 V*2
Overvoltage category	300 V CAT III	300 V CAT III		300 V CAT III	300 V CAT III		300 V CAT III	300 V CAT III
Operating voltage L-N, AC	115 – 277 V	-		-	-		-	196 – 255 V*4
Power supply voltage (measuring voltage)	-	95 – 240 V AC; 135 – 340 V DC*1		90 – 264 V AC; 120 – 350 V DC	95 – 240 V AC; 135 – 340 V DC*1		95 – 240 V AC; 135 – 340 V DC*1	-
Three wire / four wire (L-N, L-L)	- / •	• / •		- / •	• / •		• / •	- / •
Quadrants	4	4		4	4		4	4*3
Sampling frequency 50/60 Hz Measurement points per second	5,4 kHz 5.400	20 kHz 20.000		20 kHz 20.000	20 kHz 20.000		20 kHz 20.000	2,5 / 3 kHz 50
Uninterrupted measurement	•	•		•	•		•	-
Measurement results per second	5	5		2	5		5	1
Effective value from periods (50 / 60 Hz)	10 / 12	10 / 12		10 / 12	10 / 12		10 / 12	1 / 1
Residual current measurement	-	-		•	-		-	-
Harmonics V/A	1. – 25.	1. – 40.		1. – 63.	1. – 40.		1. – 63.	-
Distortion factor THD-U in %	•	•		•	•		•	-
Distortion factor THD-I in %	•	•		•	•		•	-
Unbalance	-	•		-	•		•	-
Positive / negative / zero sequence component	•	•		-	•		•	-
Present flicker strength	-	-		-	-		•	-
Short-/long-term flicker	-	-		-	-		•	-
Transients	-	-		-	50 µs		50 µs	-
Short-term interruptions, events	-	-		-	•		•	-
Accuracy V / A	0.2 %	0.2 % / 0.25 %		1 %	0.2 % / 0.25 %		0.2 % / 0.25 %	1 %
Effective power class	0,5S (.../5 A)	0,5S (.../5 A)		1	0,5S (.../5 A) / 1 (.../1 A)		0,5S (.../5 A)	2
Operating hours counter	•	•		-	•		•	•
Weekly timer	-	-		-	Jasic®		Jasic®	-
Digital inputs	-	2		-	2		2	-
Digital / pulse output	-	2		2	2		2	-
Current measurement channel	3	4		20	4		4	3
Temperature input	-	1		-	1		1	-
Integrated logic	Vergleicher	Vergleicher		-	Jasic® (7 Prg.)		Jasic® (7 Prg.)	-
Minimum and maximum values for memory	•	•		•	•		•	•
Memory size for onboard recording	4 MB Flash	4 MB Flash		768 kB	128 MB Flash		128 MB Flash	-
Number of memory values	160 k	156 k		250 k	5.000 k		5.000 k	-
Clock	•	•		•	•		•	-
Bi-metallic function	•	•		-	•		•	•
Error / event recorder function	-	-		-	•		•	-
Peak demand management	-	-		-	•*2		•*2	-
Software for energy management & power quality analysis	GridVis®-Basic	GridVis®-Basic		GridVis®-Basic	GridVis®-Basic		GridVis®-Basic	-
Interfaces								
RS232	-	•	•	-	•		•	-
RS485	•	•	•	•	•		•	-
USB	-	-	-	-	-		-	-
Profibus DP	-	-	•	-	-	•	•	-
M-Bus	-	-	-	-	-		-	-
Ethernet	-	-	-	-	•		•	-
Webserver / email	-	-	-	-	• / •		• / •	-
Protocols								
Modbus RTU	•	•	•	•	•		•	-
Modbus-Gateway	-	-	-	-	•		•	-
Profibus DP V0	-	-	•	-	-	•	•	-
Modbus TCP/IP, Modbus RTU over Ethernet, SNMP	-	-	-	-	•		•	-
BACnet (optional)	-	-	-	-	•*2		•*2	-
Profinet	-	-	-	-	-		-	-
Catalogue page	**6**	**12**		**18**	**26**		**34**	**42**

Comment: For detailed technical information please refer to the respective operation manual and the Modbus address list.

• : Included - : Not included

*1 Other voltages are also available as options
*2 Option
*3 Not for effective energy and reactive energy
*4 In the 230 V version

	UMG 96	UMG 96RM						UMG 96-PA	UMG 96RM-PN	UMG 508	UMG 509-PRO	UMG 511	UMG 512-PRO
			P	M	E	CBM	EL						
	52.09.001	52.22.061	52.22.064	52.22.069	52.22.062	52.22.066	52.22.068	52.32.001 52.32.002	52.22.090	52.21.001 52.21.011	52.26.001	52.19.001 52.19.011	52.17.011
	275 V*2	277 V						417 V	277 V	417 V	417 V	417 V	347 V
	476 V*2	480 V						720 V	480 V	720 V	720 V (3-Leiter 600 V)	720 V	600 V
	300 V CAT III	300 V CAT III						600 V CAT III	300 V CAT III	600 V CAT III	600 V CAT III	600 V CAT III	600 V CAT III
	196 – 275 V*2	-						-	-	-	-	-	-
	-	90 – 277 V AC; 90 – 250 V DC						90 – 277 V AC; 90 – 250 V DC	90 – 277 V AC; 90 – 250 V DC	95 – 240 V AC; 80 – 280 V DC*1	95 – 240 V AC; 80 – 300 V DC*1	95 – 240 V AC; 80 – 340 V DC*1	95 – 240 V AC; 80 – 300 V DC*1
	- / •	• / •						- / •	• / •	• / •	• / •	• / •	• / •
	4*3	4						4	4	4	4	4	4
	2,5 / 3 kHz 50	21,33 / 25,6 kHz 21.330 / 25.600						8,33 kHz 8.330	21,33 / 25,6 kHz 21.330 / 25.600	20 kHz 20.000	20 kHz 20.000	20 kHz 20.000	25,6 kHz 25.600
	-	•						•	•	•	•	•	•
	1	5						5	5	5	5	5	5
	1 / 1	10 / 12						10 / 12	10 / 12	10 / 12	10 / 12	10 / 12	10 / 12
	-	-	-	-	•	-	-	-	•	-	•	-	•
	-	1. – 40.						1. – 25.	1. – 40.	1. – 40.	1. – 63.	1. – 63.	1. – 63.
	-	•						•	•	•	•	•	•
	-	•						•	•	•	•	•	•
	-	-						-	-	•	•	•	•
	-	•						•	•	•	•	•	•
	-	-						-	-	-	-	•	•
	-	-						-	-	-	-	•	•
	-	-						-	-	50 µs	50 µs	50 µs	39 µs
	-	-	-	-	•	-	-	-	-	•	•	•	•
	1 %	0.2 % / 0.2 %						0,2 %	0.2 % / 0.2 %	0.1 % / 0.2 %	0.1 % / 0.2 %	0.1 % / 0.2 %	0.1 % / 0.1 %
	2	0,5S (.../5 A)						0,5S (.../5 A)	0,5S (.../5 A) / 1 (.../1 A)	0,2S (.../5 A)	0,2S (.../5 A)	0,2S (.../5 A)	0,2S (.../5 A)
	•	•						•	•	•	•	•	•
	-	-						-	-	•	•	•	•
	-	-	4	-	(3)*5	4	-	3	(3)*5	8	2	8	2
	•	2	6	2	(5)*5	6	-	3	(5)*5 *8	5	2	5	2
	3	3	4	3	4+2	4	3	3	4+2	4	4+2	4	4+2
	-	-	-	-	2*6	-	-	-	2*6	-	1	-	1
	Vergleicher	Vergleicher						Vergleicher	Vergleicher	Jasic®	Jasic®	Jasic®	Jasic®
	•	•						•	•	•	•	•	•
	-	-	256 MB	-	256 MB	256 MB	-	4 MB Flash	-	256 MB	256 MB	256 MB	256 MB
	-	-	10.000 k	-	10.000 k	10.000 k	-	160 k	-	10.000 k	10.000 k	10.000 k	10.000 k
	-	-	•	-	•	•	-	•	-	•	•	•	•
	•	•						•	•	•	•	•	•
	-	-						-	-	•	•	•	•
	-	-						-	-	•*2	-	•*2	-
	-	GridVis®-Basic						GridVis®-Basic	GridVis®-Basic	GridVis®-Basic	GridVis®-Basic	GridVis®-Basic	GridVis®-Basic
	-	-						-	-	-	-	-	-
	-	•	•	-	•	•	-	•	•	•	•	•	•
	-	-	•	-	-	•	-	-	-	-	-	-	-
	-	-	•	-	-	-	-	-	-	•	•	•	•
	-	-	-	•	-	-	-	-	-	-	-	-	-
	-	-	-	-	•	-	•	-	•	•	•	•	•
	-	-	-	-	• / •	-	-	-	• / -	• / •	• / •	• / •	• / •
	-	•	•	-	•	•	-	•	•	•	•	•	•
	-	-	-	-	•	-	-	-	-	•	•	•	•
	-	-	•	-	-	-	-	-	-	•	•	•	•
	-	-	-	-	•	-	•*7	-	•*9	•	•	•	•
	-	-	-	-	•*2	-	-	-	-	•*2	•*2	•*2	•*2
	-	-	-	-	-	-	-	-	•	-	-	-	-
	42	48						64	48	72	78	84	94

*5 Combination options for the inputs and outputs: a) 5 Digital outputs; b) 2 Digital outputs and 3 Digital inputs
*6 Combined function: Selectable analogue / temperature / residual current input
*7 No SNMP protocol
*8 2 pulse outputs
*9 SNMP only for internal Profinet communication

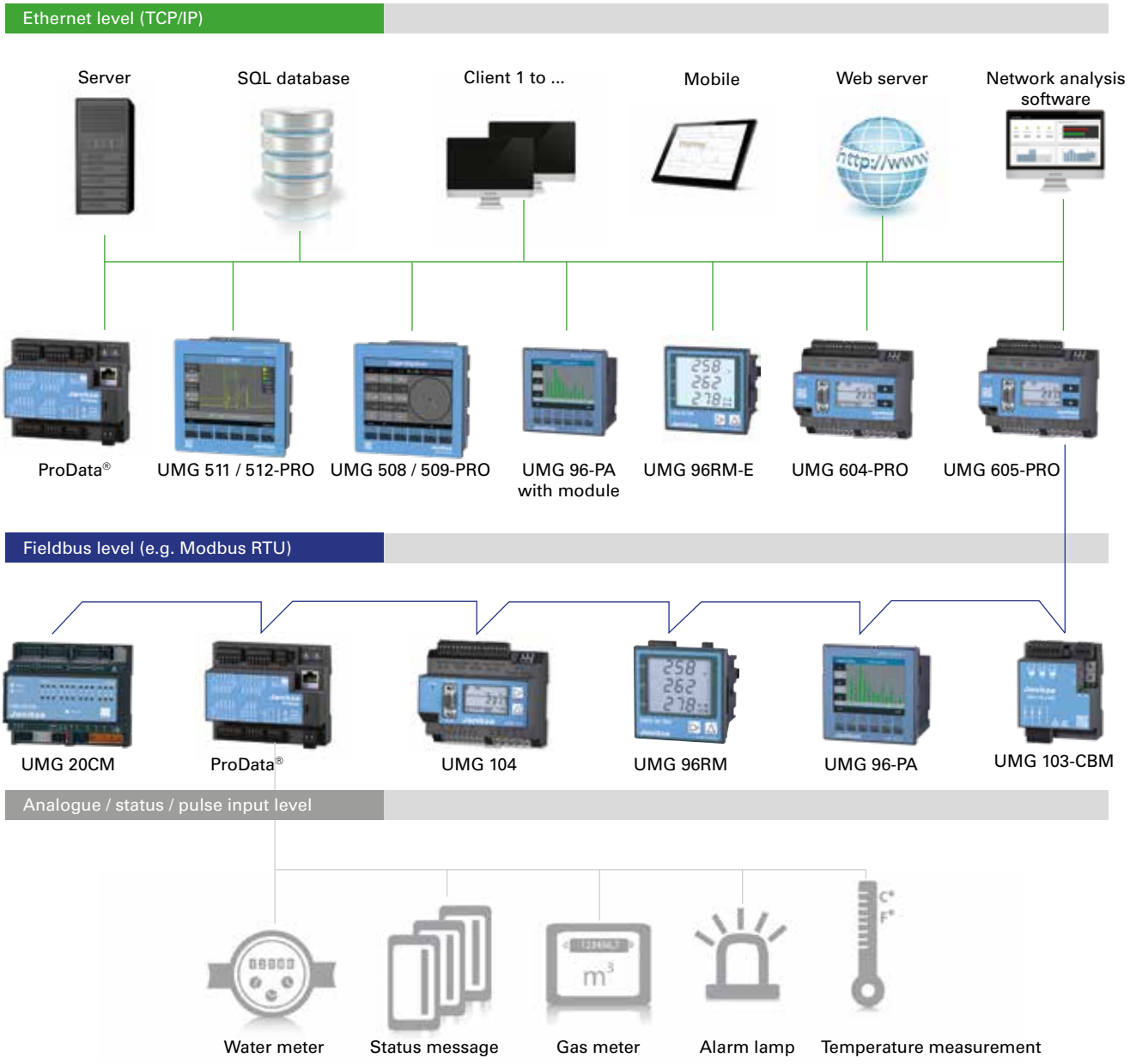

UMG 508 / UMG 509-PRO / UMG 604-PRO = Janitza power analyser

UMG 511 / UMG 512-PRO / UMG 605-PRO = Janitza power quality analyser

UMG 96RM / UMG 96RM-E / UMG 96-PA / UMG 103-CBM / UMG 104 = Janitza multifunction energy meters

UMG 20CM = Janitza 20 channel branch circuit monitoring device, for residual current monitoring (RCM) and energy data acquisition

UMG 103-CBM

Universal measurement device for DIN rails

Harmonics

Modbus interface

GridVis® Analysis software

Measurement accuracy 0.5

Communication
- Protocols: Modbus RTU / Slave

Interface
- RS485

Accuracy of measurement
- Energy: Class 0.5S (... / 5 A)
- Current: 0.5 %
- Voltage: 0.2 %

Power quality
- Harmonics up to 25th order, odd harmonics
- Distortion factor THD-U
- Distortion factor THD-I

Memory
- 4 MB

Networks
- TN, TT networks

Network visualisation software
- Free GridVis®-Basic

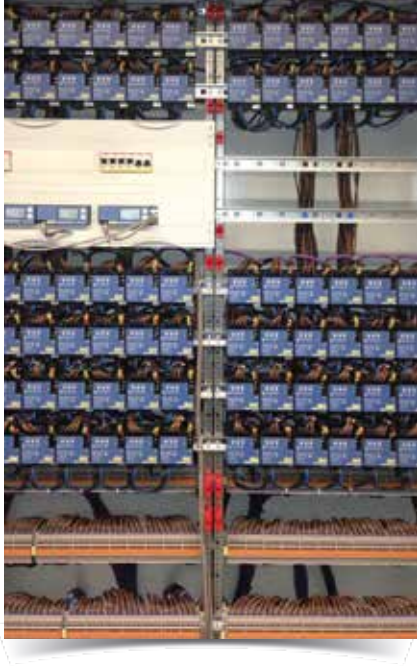

Areas of application

- Measurement and checking of electrical characteristics and energy consumption in energy distribution systems
- Cost centre management
- Threshold value monitoring, measured value transducer for building management systems or PLC
- Monitoring of harmonics

Main features

Power quality

- Harmonics analysis up to 25th harmonic, odd harmonics
- Distortion factor THD-U / THD-I
- Minimum and maximum values
- Measurement of positive, negative and zero sequence component

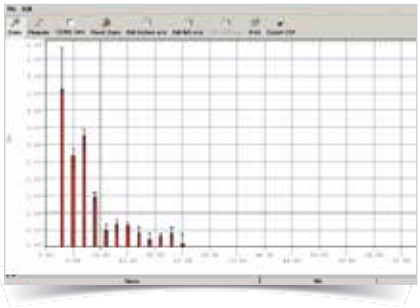

Fig.: GridVis® – Harmonics analysis (FFT)

Features

- 3 Voltage measurement inputs (300 V CATIII)
- 3 Current measurement inputs
- Continuous sampling of voltage and current measurement inputs
- Measurement of the reactive distortion power
- Sampling frequency 5.4 kHz
- Transfer of the measured values via a serial interface
- Supply voltage via measurement voltage L1-N, L2-N and L3-N

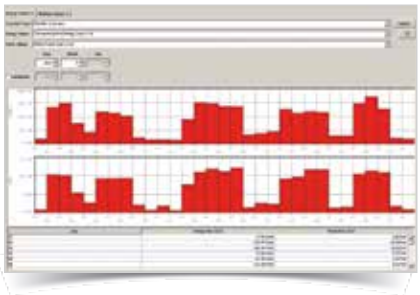

Fig.: GridVis® – Device dashboard with energy analysis

Dimension diagrams

All dimensions in mm

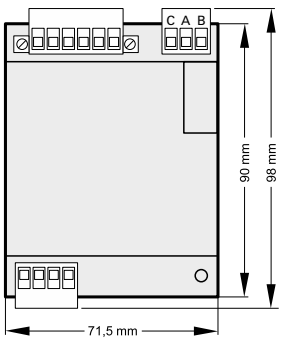

Front view

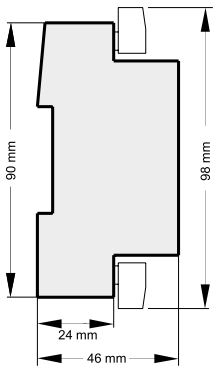

Side view

Typical connection

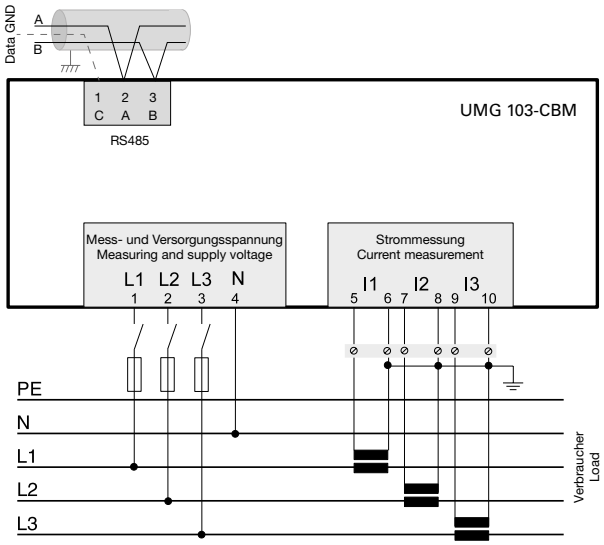

Device overview and technical data

	UMG 103-CBM
Item number	**52.28.001**
Measured voltage (L-N/L-L)	277 / 480 V AC
Operating voltage (from 3-phase network)	80 ... 277 V AC
General	
Use in low and medium voltage networks	•
Accuracy voltage measurement	0.2 %
Accuracy current measurement	0.5 %
Accuracy active energy (kWh, .../5 A)	Class 0.5S
Number of measurement points per period	108
Uninterrupted measurement	•
RMS - momentary value	
Current, voltage, frequency	•
Active, reactive and apparent power / total and per phase	•
Power factor / total and per phase	•
Energy measurement	
Active, reactive and apparent energy [L1,L2,L3, ∑ L1-L3]	•
Number of tariffs	4
Recording of the mean values	
Voltage, current / actual and maximum	•
Active, reactive and apparent power / actual and maximum	•
Frequency / actual and maximum	•
Demand calculation mode (bi-metallic function) / thermal	•

Comment:
For detailed technical information please refer to the operation manual and the Modbus address list.

• = included - = not included

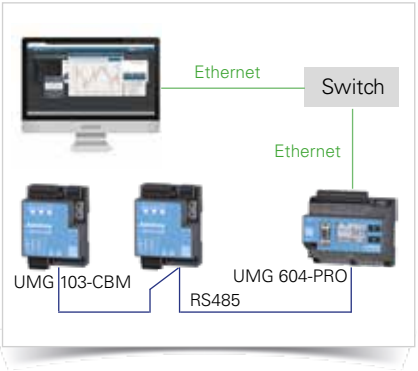

Fig.: Connection of multiple UMG 103-CBMs to a PC via a UMG 604-PRO (with Ethernet option)

	UMG 103-CBM
Other measurements	
Operating hours measurement	•
Power quality measurements	
Harmonics per order / current	1st – 25th
Harmonics per order / voltage	1st – 25th
Distortion factor THD-U in %	•
Distortion factor THD-I in %	•
Current and voltage, positive, zero and negative sequence component	•
Measured data recording	
Current measurement channels	3
Recording time	up to 144 days
Memory (Flash)	4 MB
Battery	BR1632 A
Clock	•
Average, minimum, maximum values	•
Communication	
Interfaces	
RS485: Autobaud, 9.6 – 115.22 kbps (Screw-type terminal)	•
Protocols	
Modbus RTU	•
Software GridVis®-Basic*2	
Online graphs	•
Databases (Janitza DB, Derby DB)	•
Manual reports (energy, power quality)	•
Topology views	•
Manual read-out of the measuring devices	•
Graph sets	•
Programming / threshold values / alarm management	
Comparator (2 Groups with 3 comparators each)	•
Technical data	
Type of measurement	Constant true RMS up to 25th harmonic
Nominal voltage, three-phase, 4-conductor (L-N, L-L)	277 / 480 V AC (+ 10%)
Measurement in quadrants	4
Networks	TN, TT
Measured voltage input	
Overvoltage category	300 V CAT III
Measured range, voltage L-N, AC (without potential transformer)	80 ... 277 Vrms (± 10%)
Measured range, voltage L-L, AC (without potential transformer)	80 ... 480 Vrms (± 10%)
Resolution	0,01 V
Frequency measuring range	45 ... 65 Hz
Leistungsaufnahme	1,5 VA
Power consumption	4 kV
Sampling frequency	5,4 kHz / Phase
Measured current input	
Rated current	1 / 5 A
Resolution	0,1 mA
Measurement range	0,005 ... 6 Arms
Overvoltage category	300 V CAT III
Measurement surge voltage	2 kV
Power consumption	ca. 0,2 VA (Ri = 5 mOhm)
Overload for 1 sec.	60 A (sinusoidal)
Sampling frequency	5,4 kHz / Phase
Mechanical properties	
Weight	200 g
Device dimensions in mm (H x W x D)	approx. 98 x 71,5 x 46
Protection class per EN 60529	IP20
Assembly per IEC EN 60999-1 / DIN EN 50022	35-mm-DIN rail
Connecting phase (U / I), Single core, multi-core, fine-stranded Terminal pins, core end sheath	 0,08 bis 2,5 mm² 1,5 mm²

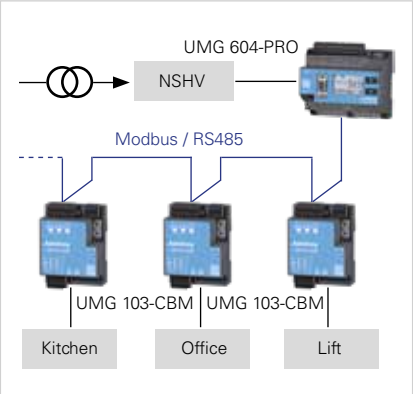

Fig.: Topology example UMG 604-PRO (Master) – UMG 103-CBM (Slave)

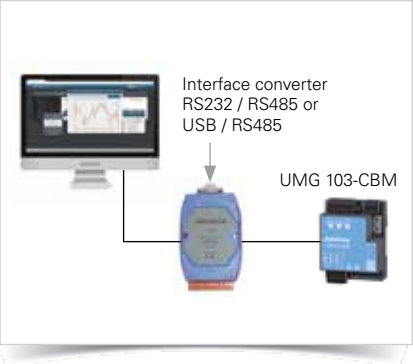

Fig.: Connection of a UMG 103-CBM to a PC via an interface converter

Environmental conditions	
Temperature range	Operation: K55 (-10 ... +55 °C)
Relative humidity	Operation: 5 to 95 % (at 25 °C)
Operating height	0 ... 2,000 m above sea level
Degree of pollution	2
Installation position	user-defined
Electromagnetic compatibility	
Electromagnetic compatibility of electrical equipment	Directive 2004/108/EC
Electrical appliances for application within particular voltage limits	Directive 2006/95/EC
Equipment safety	
Safety requirements for electrical equipment for measurement, regulation, control and laboratory use – Part 1: General requirements	IEC/EN 61010-1
Part 2-030: Particular requirements for testing and measuring circuits	IEC/EN 61010-2-030
Noise immunity	
Industrial environment	IEC/EN 61326-1
Electrostatic discharge	IEC/EN 61000-4-2
Voltage dips	IEC/EN 61000-4-11
Emissions	
Class A: Residential environment	IEC/EN 61326-1
RFI Field Strength 30 – 1,000 MHz	IEC/CISPR11/EN 55011
Radiated interference voltage 0.15 – 30 MHz	IEC/CISPR11/EN 55011
Safety	
Europe	CE labelling
USA and Canada	UL variants available
Firmware	
Firmware update	Update via GridVis® software. Firmware download (free of charge) from the website: http://www.janitza.com

*[1] Optional additional functions with the packages GridVis®-Professional, GridVis®-Service and GridVis®-Ultimate.

Comment:
For detailed technical information please refer to the operation manual and the Modbus address list.

• = included - = not included

Typical application illustration with 2 supplies

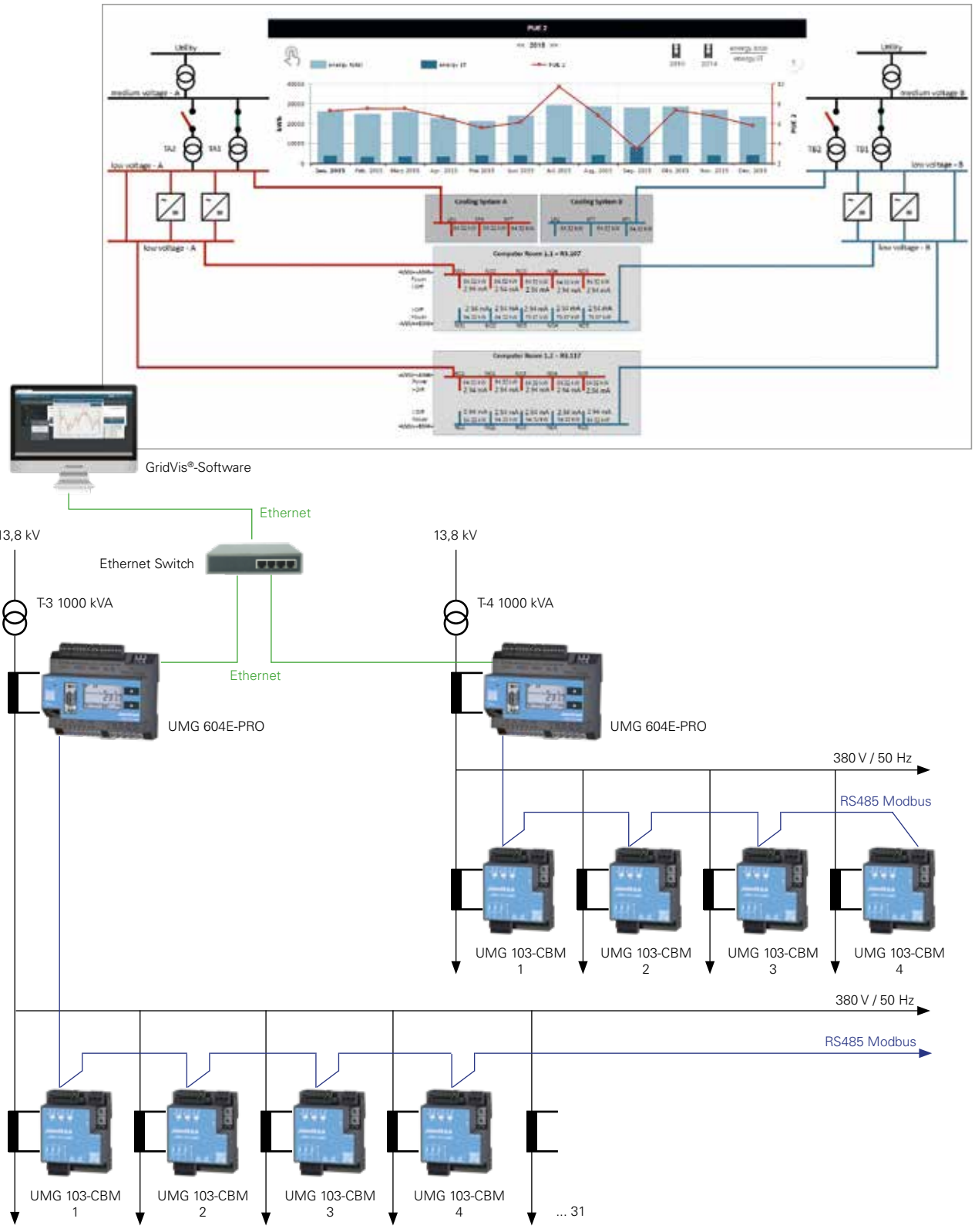

Fig.: Typical application illustration with 2 supplies, UMG 604-PRO as master measurement device in the main power supply and UMG 103-CBM for measuring the low voltage feeder.

UMG 104

Energy measurement device for DIN rails

Harmonics

Measurement accuracy 0.5

Temperature input

Memory 4 MByte

Communication
- Profibus (DP / V0 – optional)
- Modbus RTU

Interfaces
- RS232
- RS485

Accuracy of measurement
- Energy: Class 0.5S (... / 5 A)
- Current: 0.2 %
- Voltage: 0.2 %

Power quality
- Harmonics up to 40th harmonic
- Unbalance, rotary field indication
- Distortion factor THD-U / THD-I

Networks
- IT, TN, TT networks
- 3 and 4-phase networks
- Up to 4 single-phase networks

Temperature measurement
- PT100, PT1000, KTY83, KTY84

Network visualisation software
- Free GridVis®-Basic

2 digital inputs
- Pulse input
- Signalling input logic
- State monitoring

2 digital outputs
- Pulse output kWh / kvarh
- Switch output
- Threshold value output
- Logic output

Measured data memory
- 4 MByte Flash (156,000 measured values)

Areas of application

- Consumption data acquisition and evaluation (load profiles, load curves)
- Continuous power quality monitoring
- Cost centre accounting of energy costs
- Network protection
- Measured value transducer for building management systems or PLC

Main features

Power quality

- Harmonics analysis up to 40th harmonic
- Unbalance
- Rotary field indication
- Distortion factor THD-U / THD-I
- Measurement of positive, negative and zero sequence component

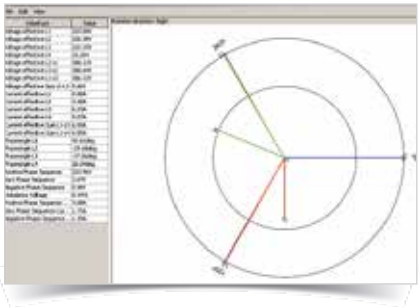

Fig.: GridVis® – Phasor diagram

High-speed Modbus

- Fast and reliable data exchange via RS485 interface
- Speed up to 921.6 kB/s

Secure and rapid communication via Modbus and Profibus

- Rapid, cost-optimised and reliable communication in existing Fieldbus architectures
- Integration in PLC systems and building management systems
- High flexibility due to the use of open standards

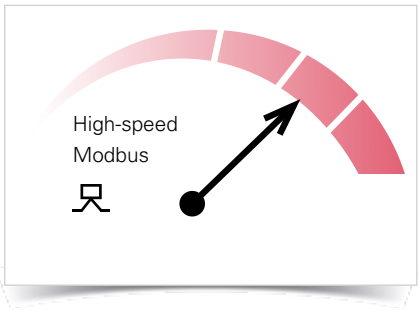

Fig.: High-speed Modbus

Large measurement data memory

- 4 MByte
- 156,000 saved values
- Recording range dependent on the user-defined measurement data memory configuration over a few months
- Recording freely configurable

Added value through additional functions

The UMG 104 goes far beyond the limits of digital multifunction measurement devices thanks to the integration of additional functions:

- Multifunction measurement device
- State monitoring
- Data logger
- Meters (kWh, kvarh)
- Temperature monitoring
- Harmonics analyser

Due to the four current and voltage inputs there are also particular advantages with the monitoring of up to four single-phase outputs, e.g. in data centres, offices or single-phase motor outputs.

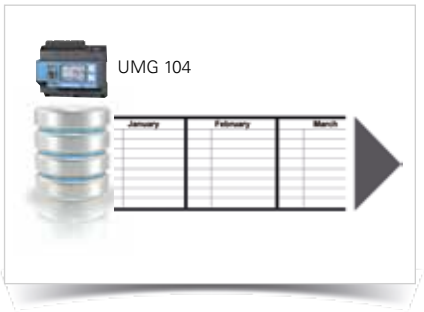

Fig.: Large measurement data memory

Dimension diagrams

All dimensions in mm

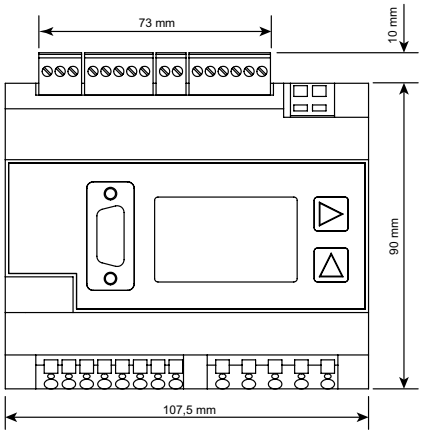

Front view

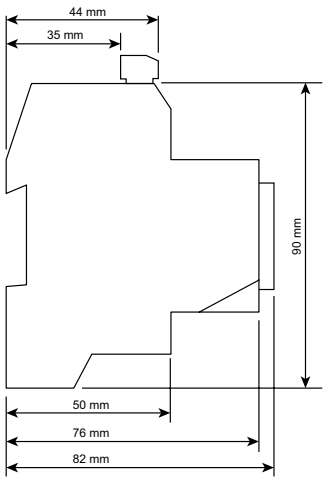

Side view

Typical connection

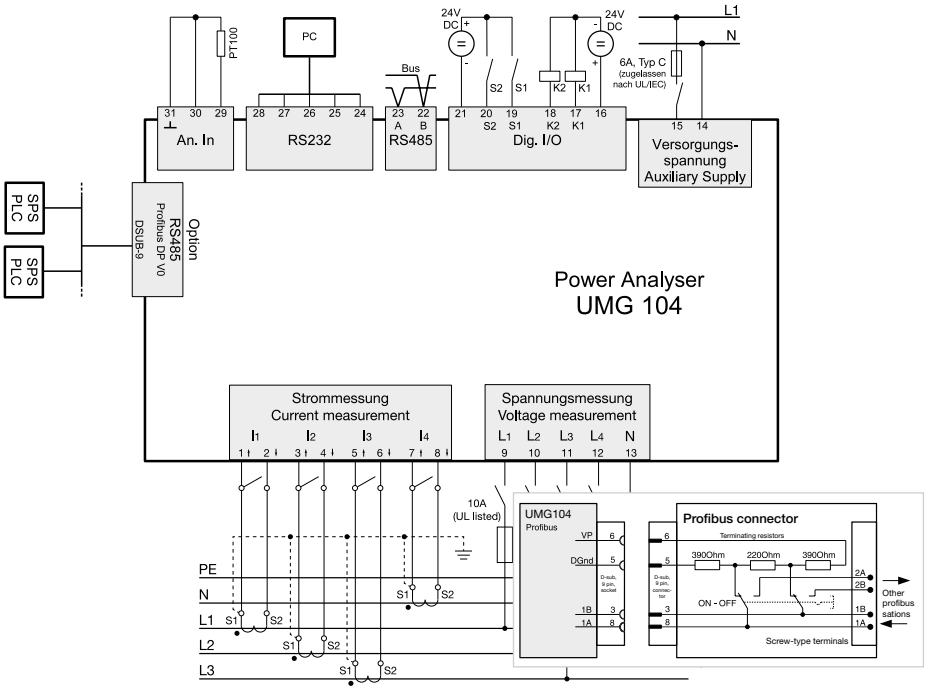

Device overview and technical data

	UMG 104			UMG 104P
Item number		**52.20.003**		
Item number (UL)	**52.20.201**	**-**	**52.20.205**	**52.20.202**
Supply voltage AC	95 ... 240 V AC	50 ... 110 V AC	20 ... 50 V AC	95 ... 240 V AC
Supply voltage DC	135 ... 340 V DC	50 ... 155 V DC	20 ... 70 V DC	135 ... 340 V DC
Communication				
Interfaces				
RS485: 9.6 – 921.6 kbps (Screw-type terminal)	•	•	•	•
RS232: 9.6 – 115.2 kbps (Screw-type terminal)	•	•	•	•
Profibus DP: Up to 12 Mbps (DSUB-9-socket)	-	-	-	•

General	
Use in low and medium voltage networks	•
Accuracy voltage measurement	0.2 %
Accuracy current measurement	0.25 %
Accuracy active energy (kWh, .../5 A)	Class 0.5S
Number of measurement points per period	400
Uninterrupted measurement	•
RMS - momentary value	
Current, voltage, frequency	•
Active, reactive and apparent power / total and per phase	•
Power factor / total and per phase	•

Comment: For detailed technical information please refer to the operation manual and the Modbus address list.

• = included - = not included

An RS232 connecting cable is not included in the delivery and must be ordered separately as item no. 08.02.427.

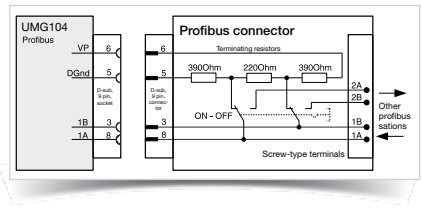

Fig.: Profibus connector, contact allocation

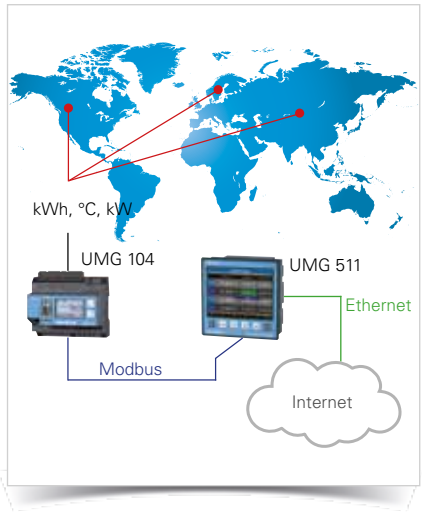

Fig.: Word-wide remote monitoring of the energy consumption and temperature for various different locations

Comment: For detailed technical information please refer to the operation manual and the Modbus address list.

• = included - = not included

*1 Optional additional functions with the packages GridVis®-Professional, GridVis®-Service and GridVis®-Ultimate.

*2 The UMG104 can only detect measurement values if a voltage L-N larger than 10 Veff or a voltage L-L larger than 18 Veff is applied to at least one voltage measurement input.

Energy measurement	
Active, reactive and apparent energy [L1,L2,L3, L4, ∑ L1–L3, ∑ L1–L4]	•
Recording of the mean values	
Voltage, current / actual and maximum	•
Active, reactive and apparent power / actual and maximum	•
Frequency / actual and maximum	•
Demand calculation mode (bi-metallic function) / thermal	•
Other measurements	
Clock	•
Power quality measurements	
Harmonics per order / current and voltage	1st – 40th
Harmonics per order / active and reactive power	1st – 40th
Distortion factor THD-U in %	•
Distortion factor THD-I in %	•
Voltage unbalance	•
Rotary field indication	•
Current and voltage, positive, zero and negative sequence component	•
Measured data recording	
Memory (Flash)	4 MB
Average, minimum, maximum values	•
Measured data channels	4
Alarm messages	•
Time stamp	•
Time basis average value	freely user-defined
RMS averaging, arithmetic	•
Displays and inputs / outputs	
LCD display	•
Digital inputs	2
Digital outputs (as switch or pulse output)	2
Thermistor input (PT100, PT1000, KTY83, KTY84)	•
Voltage and current inputs	every 4
Password protection	•
Communication	
Protocols	
Modbus RTU	• / •
Profibus DP V0	- / •
Software GridVis®-Basic*1	
Online graphs	•
Databases (Janitza DB, Derby DB); MySQL, MS SQL with higher GridVis® versions)	•
Manual reports (energy, power quality)	•
Topology views	•
Manual read-out of the measuring devices	•
Graph sets	•
Programming / threshold values / alarm management	
Comparator (2 Groups with 4 comparators each)	•
Technical data	
Type of measurement	Constant true RMS Up to 40th harmonic
Nominal voltage, three-phase, 4-conductor (L-N, L-L)	277 / 480 V AC
Nominal voltage, three-phase, 3-conductor (L-L)	480 V AC
Measurement in quadrants	4
Networks	TN, TT, IT
Measurement in single-phase / multi-phase networks	1 ph, 2 ph, 3 ph, 4 ph and up to 4 times 1 ph
Measured voltage input	
Overvoltage category	300 V CAT III
Measurement range, voltage L-N, AC (without potential transformer)	0*2 ... 600 Vrms
Measurement range, voltage L-L, AC (without potential transformer)	0*2 ... 1,000 Vrms
Resolution	0.01 V
Impedance	4 MOhm / phase
Frequency measuring range	45 ... 65 Hz
Power consumption	approx. 0.1 VA
Sampling frequency	20 kHz / phase

Measured current input	
Rated current	1 / 5 A
Resolution	1 mA
Measurement range	0.005 ... 8.5 Amps
Overvoltage category	300 V CAT III
Measurement surge voltage	4 kV
Power consumption	approx. 0.2 VA (Ri = 5 MOhm)
Overload for 1 sec.	100 A (sinusoidal)
Sampling frequency	20 kHz
Digital inputs and outputs	
Number of digital inputs	2
Maximum counting frequency	20 Hz
Input signal present	18 ... 28 V DC (typical 4 mA)
Input signal not present	0 ... 5 V DC, current < 0.5 mA
Number of digital outputs	2
Switching voltage	max. 60 V DC, 30 V AC
Switching current	max. 50 mA Eff AC / DC
Pulse output (energy pulse)	max. 20 Hz
Maximum cable length	up to 30 m unscreened, from 30 m screened
Mechanical properties	
Weight	350 g
Device dimensions in mm (H x W x D)	90 x 107.5 x approx. 82
Battery	Type Lithium CR2032, 3 V
Protection class per EN 60529	IP20
Assembly per IEC EN 60999-1 / DIN EN 50022	35-mm DIN rail
Connecting phase (U / I), Single core, multi-core, fine-stranded Terminal pins, core end sheath	 0.08 to 2.5 mm² 1.5 mm²
Environmental conditions	
Temperature range	Operation: K55 (-10 ... +55 °C)
Relative humidity	Operation: 5 to 95 % (at 25 °C)
Operating height	0 ... 2,000 m above sea level
Degree of pollution	2
Installation position	user-defined
Electromagnetic compatibility	
Electromagnetic compatibility of electrical equipment	Directive 2004/108/EC
Electrical appliances for application within particular voltage limits	Directive 2006/95/EC
Equipment safety	
Safety requirements for electrical equipment for measurement, regulation, control and laboratory use – Part 1: General requirements	IEC/EN 61010-1
Part 2-030: Particular requirements for testing and measuring circuits	IEC/EN 61010-2-030
Noise immunity	
Industrial environment	IEC/EN 61326-1
Electrostatic discharge	IEC/EN 61000-4-2
Voltage dips	IEC/EN 61000-4-11
Emissions	
Class B: Residential environment	IEC/EN 61326-1
Radio disturbanc voltage strength 30 – 1000 MHz	IEC/CISPR11/EN 55011
Radiated interference voltage 0.15 – 30 MHz	IEC/CISPR11/EN 55011
Safety	
Europe	CE labelling
USA and Canada	UL variants available
Firmware	
Firmware update	Update via GridVis® software. Firmware download (free of charge) from the website: http://www.janitza.com

Comment:
For detailed technical information please refer to the operation manual and the Modbus address list.

• = included - = not included

UMG 20CM

20 Channel Branch Circuit Monitoring Device with RCM

RCM

Modbus

GridVis®
Analysis software

Harmonics via analysis channel

Alarm management

20 current channels

Interfaces / communication
- RS485
- Modbus RTU

Accuracy of measurement
- Active energy Class 1
- Current: 1 %
- Voltage: 1 %

NEW: Now available with memory
- 768 kB

Power quality
- Harmonics up to 63rd harmonic (analysis channel)
- Crest factor / total harmonic distortion
- Minimum and maximum values for currents with time stamp
- Threshold value for each current channel / limit value bit

- **20 Current measurement channels**
- True RMS measurement
- High sampling rate at 20 kHz
- Operating current and residual current monitoring (RCM)

2 digital outputs (open collector)
- Pulse output kWh / kvarh
- Relay / PLC inputs

Network visualisation software
- Free GridVis®-Basic

Areas of application

- Continuous acquisition of the operating currents
- Permanent residual current monitoring
- Messages in the event of the nominal current being exceeded
- Energy acquisition for complete current distribution
- Cost centre accounting
- Transparency of energy costs
- More effective use of IT infrastructure
- PDUs in data centres
- Increase of high availability power supply

Main features

RCM and energy measurement device in a single unit

- 20 current measurement channels +/- 0.5 %
- 3 voltage measurement channels +/- 0.5 %
- Internal RS485 interface (Modbus as Slave)
- 20 LEDs – One LED for each current channel (Green = o.k., Yellow = Warning; Red = Nominal current exceed)
- Measurement range of operation current with burden up to 63 A with closed or split core current transformers (standard measured values: V, A, kW, kVA, kVar, kWh)

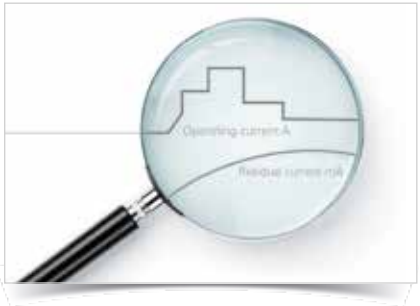

Fig.: Operating current and RCM fault current monitoring

The system for smart people

- Compact nature of the system
- Can be retrofitted to existing systems
- Modbus RTU directly on board
- State indication per channel (LEDs)
- Name stored per channel in the measurement device
- Polarity reversal for the current channels
- Memory function for the messages of the threshold monitoring
- Wide range power adapter (90 – 276 V ... AC / DC)
- Integration in the GridVis® software
- Diverse current transformer variants for the individual application
- Measurement variants:
  - Three-phase and single-phase energy measurement
  - RCM measurement three-phase and single-phase
- High sampling rate 20,000 Hz
- Current transformer connection monitoring (i.e. wire break will be detected)
- Harmonics analysis up to 63rd harmonic via analysis channel
- Saving of minimum and maximum values with time stamp
- Standard measured values: V, A, kW, kVA, kVar, kWh (variable list)
- Scalability of the system

The system

Power supply without drop-outs

- Permanent monitoring and logging of processes in TN-S or TN-C-S systems
- Simple parameterisation and operation of the RCM measurement
- Automatic reporting in the event of problems enables a rapid initiation of countermeasures
- Comprehensive diagnostics increase safety and efficiency of a company

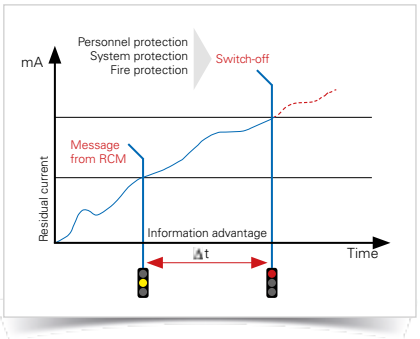

Fig.: Message before shut-down - an objective of residual current monitoring

Alarms before failures (preventative residual current analysis)

- Faults arising will be detected in good time
- Monitoring, evaluation and reporting of creeping increases in residual currents (e.g. triggered by insulation faults and operating currents for system parts or loads being too high)
- Reduction of downtimes

Sensors for energy management

- Energy data of a large number of loads can be acquired and passed to a database with ease
- Automatic reading out and saving of the measured values and data saved in the measurement devices as well as the exceedance of parameterised threshold values
- Channel-specific measured values of the current monitoring devices can be displayed via the GridVis® software
  - The progression of measured values is visualised graphically
  - Display of warnings or fault messages possible, e.g. via the topology views.
  - Associated message texts can be freely configured for this
  - Automatic sending of an email in the event of operational or fault messages
  - Remote monitoring of the entire system is possible via internet
  - Residual current and operational current monitoring devices can be parameterised via GridVis® (Modbus)
- The evaluation and saving of data in central databases is implemented via the GridVis® software
- The greater the scope of information, the more accurate the determination of savings potentials
- Energy optimisation offers a higher, more economical savings potential (ISO 50001)

Fig.: Read-out, analysis and saving of energy data

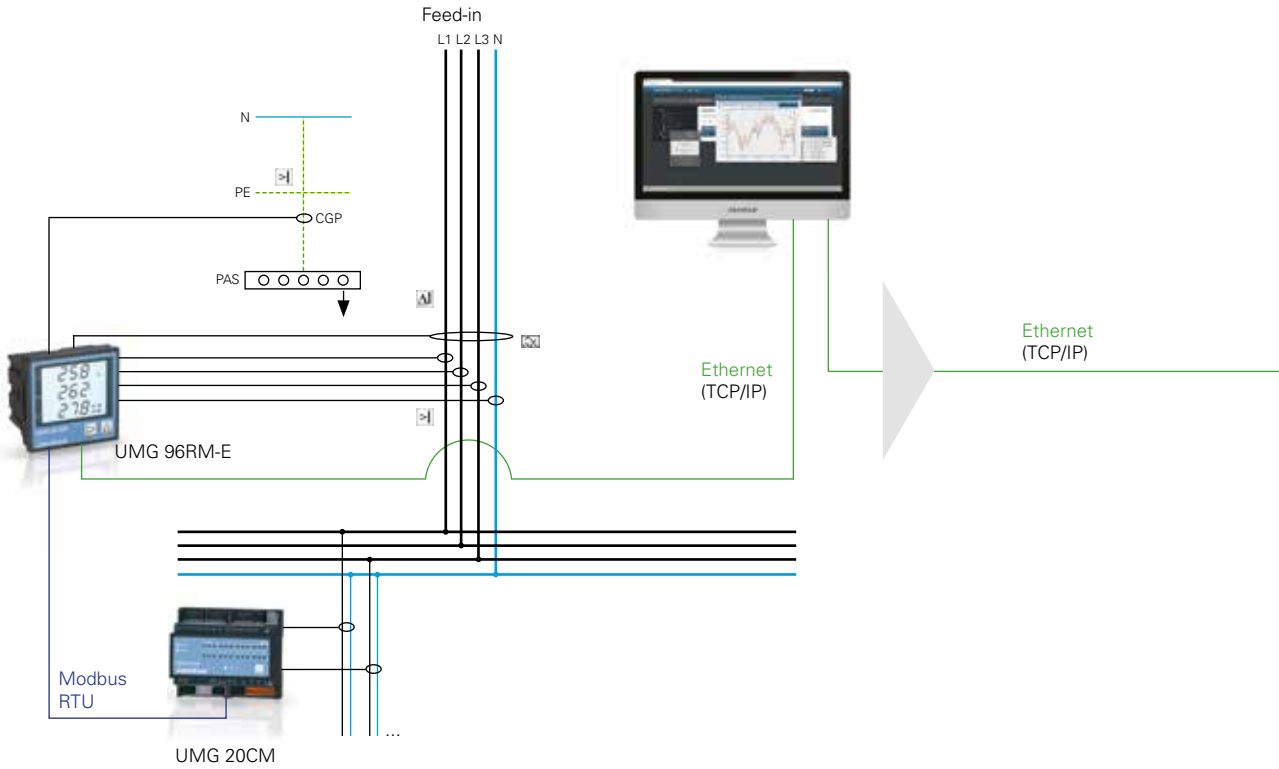

Fig.: The 20 channels of the UMG 20CM can be optionally used for residual current or operational current monitoring by utilising the corresponding current measurement transformer. In the case of residual current monitoring, the residual currents flowing to ground or any other path are acquired.

Your benefits

The intelligent system solution

- Early warning with system failures
- Avoidance of costly and hazardous system downtimes; the availability of systems is increased
- Localisation of individual faulty feeders, reduced work when troubleshooting
- Early detection of an overloading of the N conductor and critical residual currents, resulting in increased fire safety
- Through parameterisation of the system in new condition and constant monitoring, all changes to the system state after the point of commissioning can be detected
- Fulfilment of the safety criteria "RCM residual current monitoring" in data centres
- Convenient monitoring and parameterisation solution with GridVis® software
- Operating current acquisition of all relevant consumers as a basis for an energy management system (EnMS)

Fig.: Constant processes and highly sensitive applications such as data centres, are based on RCM monitoring.

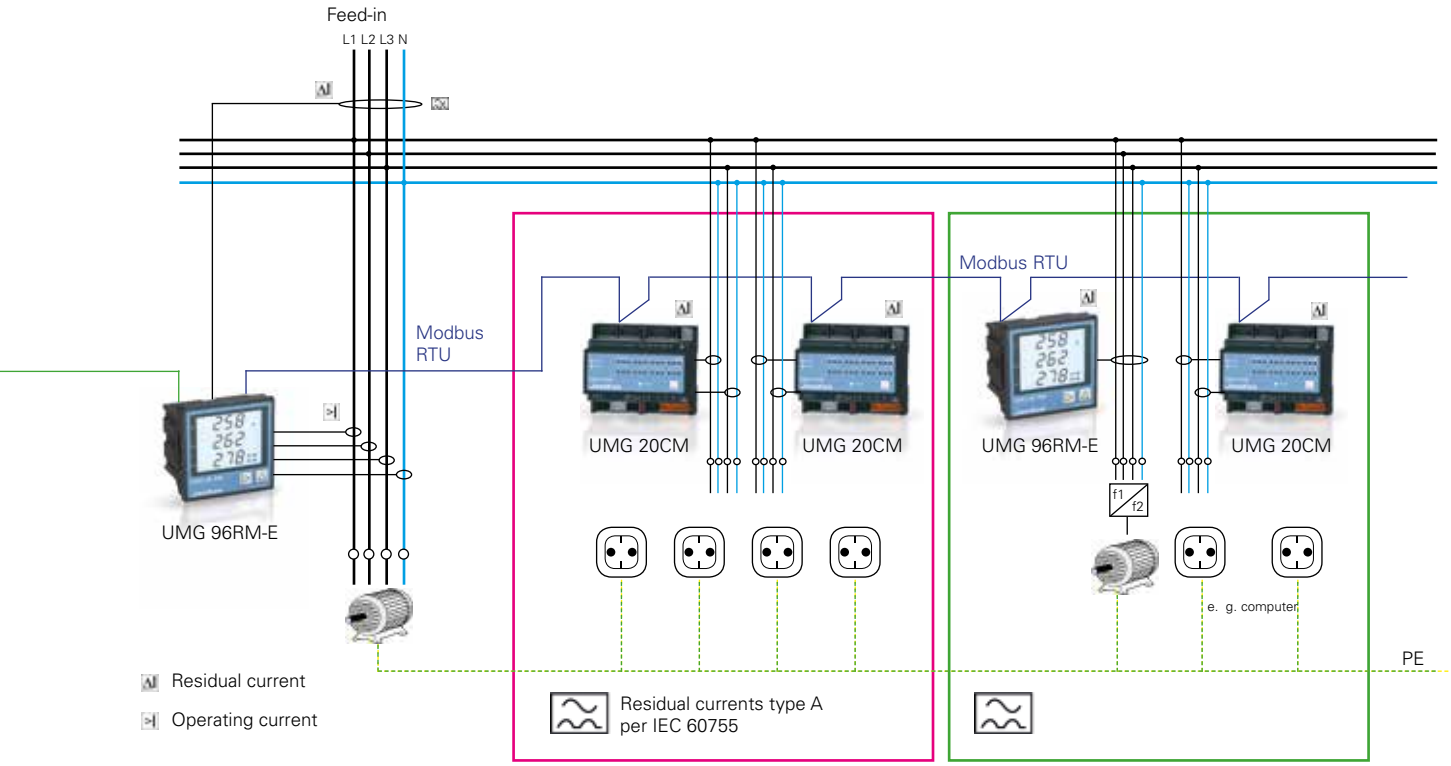

Dimension diagrams

All dimensions in mm

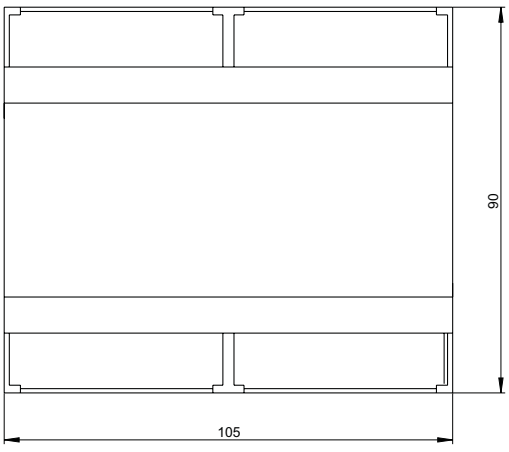

Front view

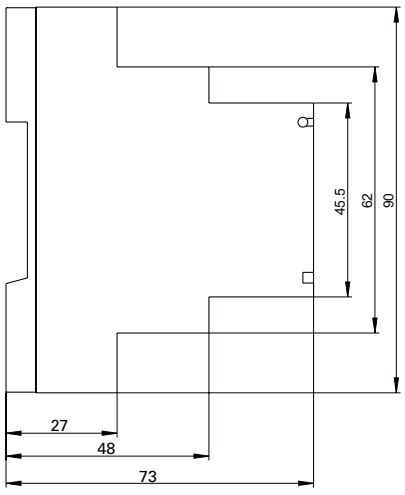

Side view

Typical connection

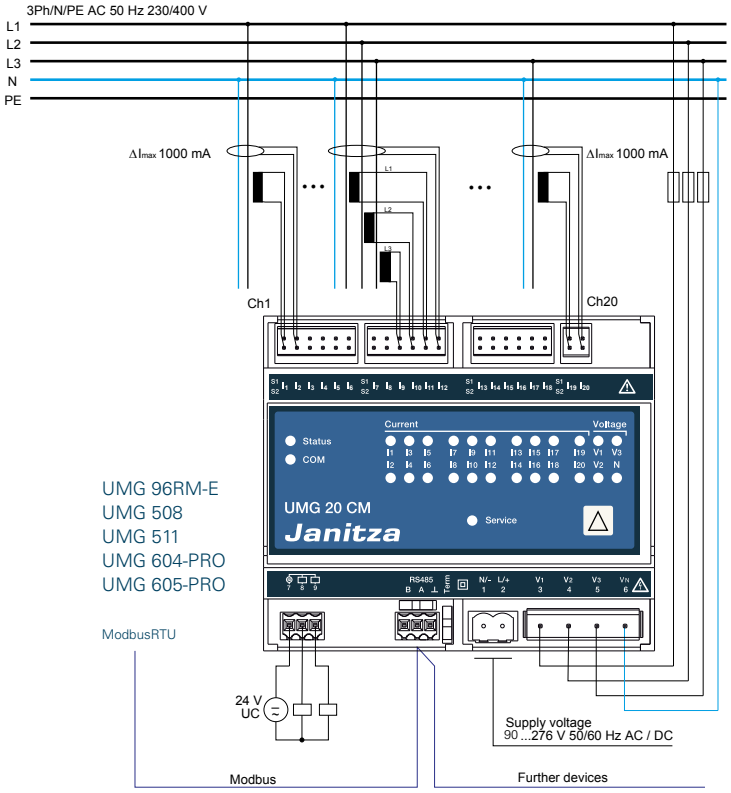

Recommendation: The bus should not contain more than 10 devices, type UMG 20CM if several UMG 20CM measuring channels are used. If the APP "20CM-Webmonitor" is used, the number is limited to 5 devices due to the APP management).

Device overview and technical data

	UMG 20CM
Item number	**14.01.625**
Power supply voltage	90 ... 264 V AC / 120 ... 350 V DC

General	
Use in low and medium voltage networks	•
Accuracy voltage measurement	1 %
Accuracy current measurement	1 %
Accuracy active energy (kWh)	Class 1
Number of measurement points per period	400
Uninterrupted measurement	•
RMS - momentary value	
Current, voltage, frequency	•
Active, reactive and apparent power for each of the 20 current inputs	•
Power factor for each of the 20 current inputs	•
Energy measurement	
Active energy (for each of the 20 current inputs, + 7 aggregating channels)	•
Recording of the mean values	
Current / present, minimum and maximum	•
Active power / present, minimum and maximum	•
Frequency / present	•
Aggregating channels	7

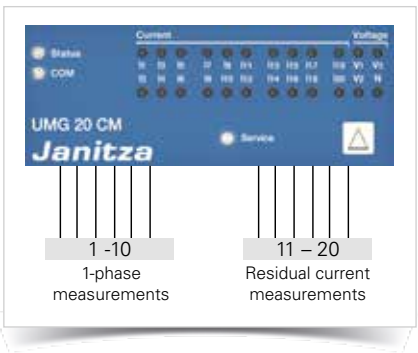

Fig.: 10 single-phase operational current measurements,
10 single-phase residual current measurements,

Comment: For detailed technical information please refer to the operation manual and the Modbus address list.

• = included - = not included

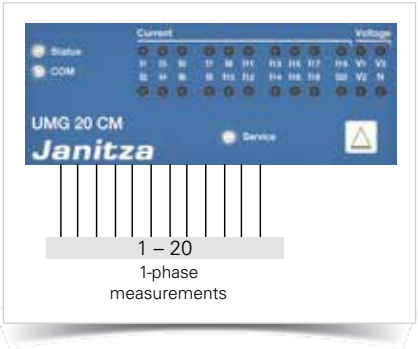

Fig.: 20 single-phase operating current or RCM measurements

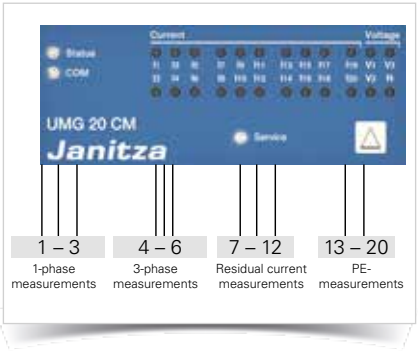

Fig.: 3 single-phase operational current measurements,
1 three-phase operational current measurement,
6 single-phase residual current measurements,
8 single-phase PE measurements

RCM measurement	
Residual current monitoring for all 20 channels (selectable)	•
Current transformer connection monitoring (i.e. wire break will be detected)	•
Power quality measurements	
Harmonics per order / current and voltage (absolute and in %)	1st – 63rd
Distortion factor THD-I in %	•
Under and overcurrent recording	•
Crest factor	•
Measured data recording	
Memory (Flash)	768 kB
Minimum, maximum values	•
Measured data channels	24
Alarm messages	•
Time stamp	•
Displays and inputs / outputs	
LCD display	-
LEDs (3 states each)	27
Digital outputs (as switch or pulse output)	2
Voltage measurement inputs	L1, L2, L3 + N
Current measurement inputs	20
Communication	
Interfaces	
RS485: 9.6 – 115.2 kbps (Screw-type terminal)	•
Protocols	
Modbus RTU (Slave)	•
Software GridVis®-Basic*1	
Online and historic graphs	•
Databases (Janitza DB, Derby DB); MySQL, MS SQL with higher GridVis® versions)	•
Manual reports (energy, power quality)	•
Graphical programming	•
Topology views	•
Manual read-out of the measuring devices	•
Graph sets	•

Technical data	
Type of measurement	Constant true RMS up to the 63rd harmonic
Nominal voltage, three-phase, 4-conductor (L-N, L-L)	230 / 400 V AC
Measurement in quadrants	4
Networks	TN, TT, IT
Measurement in single-phase / multi-phase networks	1 ph, 2 ph, 3 ph, 4 ph and up to 20 times 1 ph
Measured voltage input	
Overvoltage category	300 V CAT III
Measured range, voltage L-N, AC (without potential transformer)	10 ... 300 Vrms
Measured range, voltage L-L, AC (without potential transformer)	10 ... 480 Vrms
Resolution	0.1 V
Impedance	1.3 MOhm / phase
Frequency measuring range	45 ... 65 Hz
Sampling frequency	20 kHz / phase
Measured current input	
Evaluation range of the operating current	0 ... 600 A
Evaluation range of the residual current	10 mA ... 15 A
Resolution	1 mA
Digital inputs and outputs	
Number of digital outputs	2
Switching voltage	max. 60 V DC, 30 V AC
Maximum current	350 mA
Switch-on resistance	2 Ohm
Maximum cable length	up to 30 m unscreened, from 30 m screened

Comment: For detailed technical information please refer to the operation manual and the Modbus address list.

• = included - = not included

*1 Optional additional functions with the packages GridVis®-Professional, GridVis®-Service and GridVis®-Ultimate.

Mechanical properties	
Weight	270 g
Device dimensions in mm (H x W x D)	90 x 105 x approx. 73
Protection class per EN 60529	IP20
Assembly per IEC EN 60999-1 / DIN EN 50022	35-mm DIN rail
Environmental conditions	
Temperature range	Operation: K55 (-10 ... +55 °C)
Relative humidity	Operation: 5 to 95 % (at 25 °C)
Operating height	0 ... 2,000 m above sea level
Degree of pollution	3
Installation position	user-defined
Electromagnetic compatibility	
Electromagnetic compatibility of electrical equipment	Directive 2004/108/EC
Electrical appliances for application within particular voltage limits	Directive 2006/95/EC
Equipment safety	
Safety requirements for electrical equipment for measurement, regulation, control and laboratory use – Part 1: General requirements	IEC/EN 61010-1
Part 2-030: Particular requirements for testing and measuring circuits	IEC/EN 61010-2-030
Noise immunity	
Class A: Industrial environment	IEC/EN 61326-1
Electrostatic discharge	IEC/EN 61000-4-2
Voltage dips	IEC/EN 61000-4-11
Emissions	
Class B: Residential environment	IEC/EN 61326-1
RFI Field Strength 30 – 1,000 MHz	IEC/CISPR11/EN 55011
Radiated interference voltage 0.15 – 30 MHz	IEC/CISPR11/EN 55011
Safety	
Europe	CE labelling
Firmware	
Firmware update	Update via GridVis® software. Firmware download (free of charge) from the website: http://www.janitza.com

Fig.: Residual current transformer for the acquisition of residual currents. Different configurations and sizes allow use in almost all applications (see chapter 06, current / voltage transformers and sensors).

Comment: For detailed technical information please refer to the operation manual and the Modbus address list.
Recommendation: The bus should not contain more than 10 devices, type UMG 20CM if several UMG 20CM measuring channels are used. If the APP "20CM-Webmonitor" is used, the number is limited to 5 devices due to the APP management).

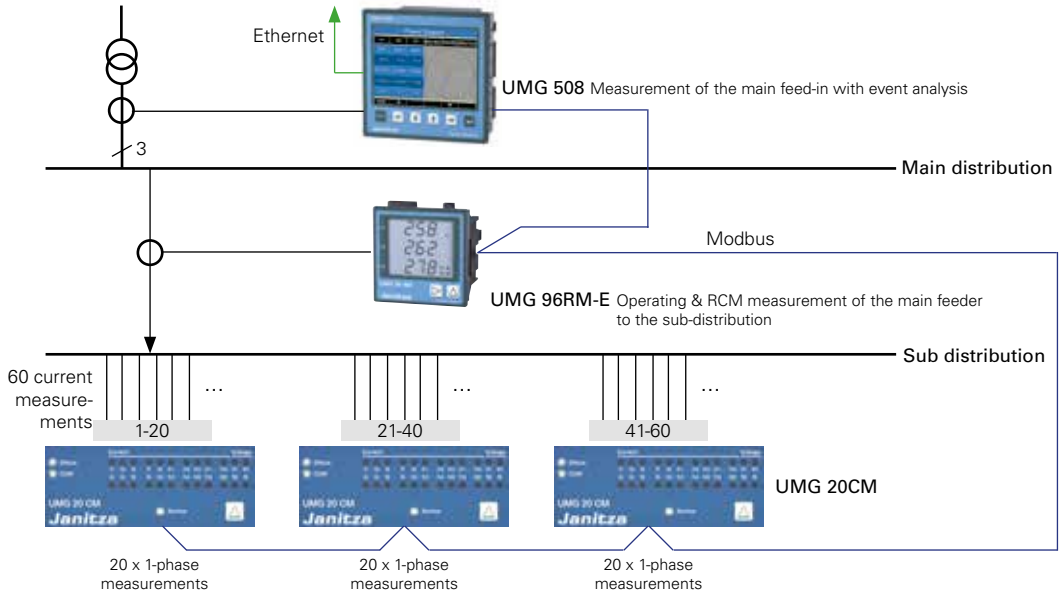

Fig.: Extremely compact solution for complete monitoring via three levels with leading-edge master-slave communication architecture

UMG 604-PRO

Power analyser

Harmonics

Memory 128 MByte

Events

Modbus master, Ethernet gateway

Homepage

Graphic programming

Communication
- Profibus (DP/ V0)
- Modbus (RTU, UDP, TCP, Gateway)
- TCP/IP
- BACnet (optional)
- HTTP (configurable homepage)
- FTP (file transfer)
- SNMP
- TFTP
- NTP (time synchronisation)
- SMTP (email function)
- DHCP

Interfaces
- Ethernet
- RS232
- RS485

Accuracy of measurement
- Energy: Class 0.5S (... / 5 A)
- Current: 0.2 %
- Voltage: 0.2 %

Peak demand management (optional)
- Up to 64 switch-off stages

Power quality
- Harmonics up to 40th harmonic
- Short-term interruptions (> 20 ms)
- Transient recorder (> 50 µs)
- Starting currents (> 20 ms)
- Unbalance
- Full wave effective value recording (up to 4.5 min.)

Networks
- IT, TN, TT networks
- 3 and 4-phase networks
- Up to 4 single-phase networks

Measured data memory
- 128 MByte Flash

Programming language
- Jasic®

2 digital inputs
- Pulse input
- Logic input
- State monitoring
- HT / LT switching

2 digital outputs
- Pulse output kWh / kvarh
- Switch output
- Threshold value output
- Logic output

(expandable via external I/O modules, see FBM modules in chapter 05)

Temperature measurement
- PT100, PT1000, KTY83, KTY84

Network visualisation software
- Free GridVis®-Basic

Areas of application

- Master device for energy management systems, (e.g. ISO 50001)
- Measurement, monitoring and checking of electrical characteristics in energy distribution systems
- Consumption data acquisition
- Monitoring of the power quality (harmonics, short-term interruptions, transients, starting currents, etc.)
- Measured value transducer for building management systems or PLC
- Control tasks e.g. depending on measured value or limit values being reached
- Peak demand management
- Ethernet gateway for subordinate measurement points
- Remote monitoring

Main features

Power quality

- Harmonics analysis up to 40th harmonic
- Unbalance
- Distortion factor THD-U / THD-I
- Measurement of positive, negative and zero sequence component
- Short-term interruptions (> 20 ms)
- Logging and storage of transients (> 50 µs)
- Start-up processes
- Fault recorder function
- Rotary field indication

Fig.: DIN rail mounting (6 TE)

DIN mounting rail (6TE):
Simple and cost-optimised installation

- Mounting on a 35 mm DIN rail
- Clear cost advantages in the switch cabinet construction through lower installation and connection effort
- Simple integration into the LVDB, in machinery construction, in installation subdistribution panel for building management systems, in IT and in data centres

Modern communications architecture via Ethernet

- Rapid, cost-optimised and reliable communication through integration into an existing Ethernet architecture
- Integration in PLC systems and building management systems
- High flexibility due to the use of open standards
- Simultaneous polling of interfaces possible

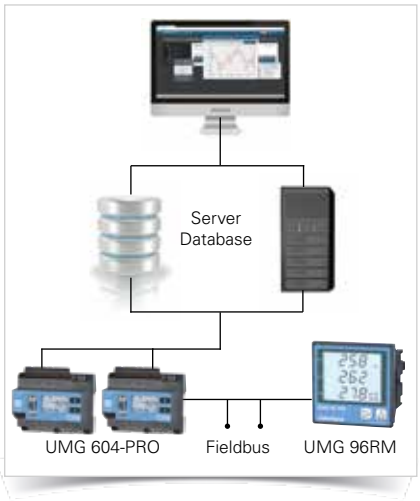

Fig.: Modern communication architecture

Ethernet-Modbus gateway

- Simple integration of Modbus-RTU devices into an Ethernet architecture through the Modbus gateway function
- Integration of devices with identical file formats and matching function codes possible via Modbus RTU interface

High-speed Modbus

- Fast and reliable data exchange via RS485 interface
- Speed up to 921.6 kB/s

Graphical programming

- Comprehensive programming options on the device, 7 programs simultaneously (PLC functionality)
- Jasic® source code programming
- Functional expansions far beyond pure measurement
- Complete APPs from the Janitza library

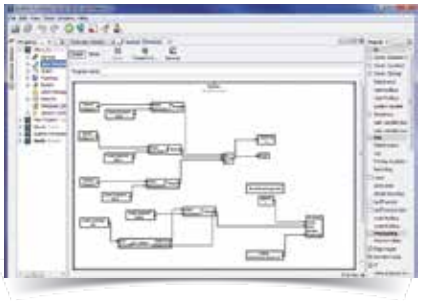

Fig.: Graphical programming

Convenient home page and email functions

- Information can be received conveniently by email and via the device homepage
- Access to powerful device homepage via web browser
- Online data, historical data, graphs, events and much more, is available direct from the homepage

Fig.: Illustration of the online data via the device's own homepage

Large measurement data memory

- 128 MByte
- 5,000,000 saved values
- Recording range up to 2 years
- Recording freely configurable

Fig.: Large measurement data memory

Dimension diagrams

All dimensions in mm

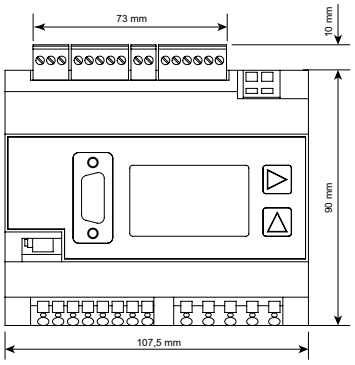

Front view

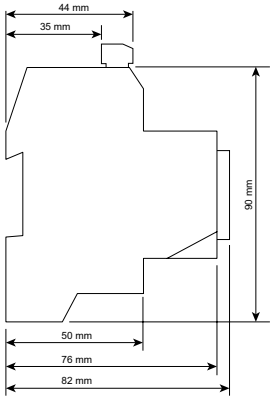

Side view

Typical connection

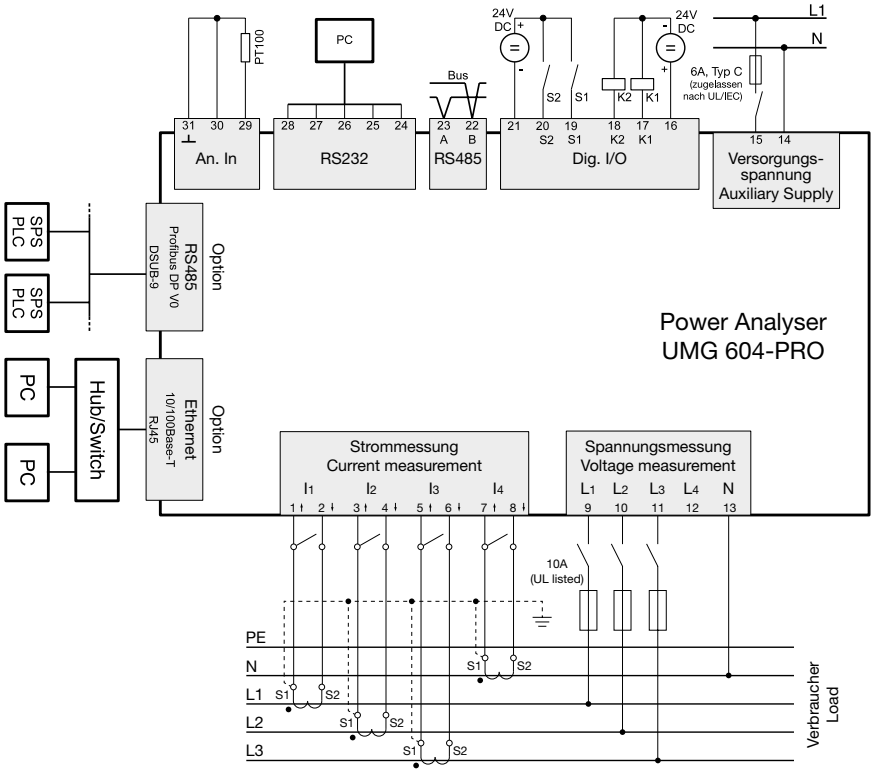

Device overview and technical data

	UMG 604E-PRO			UMG 604EP-PRO	
Item number		**52.16.012**			
Item number (UL)	**52.16.202**	**-**	**52.16.222**	**52.16.201**	**52.16.221**
Supply voltage AC	95 ... 240 V AC	50 ... 110 V AC	20 ... 50 V AC	95 ... 240 V AC	20 ... 50 V AC
Supply voltage DC	135 ... 340 V DC	50 ... 155 V DC	20 ... 70 V DC	135 ... 340 V DC	20 ... 70 V DC
Communication					
Interfaces					
RS485: 9.6 – 921.6 kbps (Screw-type terminal)	•	•	•	•	•
RS232: 9.6 – 115.2 kbps (Screw-type terminal)	•	•	•	•	•
Profibus DP: Up to 12 Mbps (DSUB-9 plug)	-	-	-	•	•
Ethernet 10/100 Base-TX (RJ-45 socket)	•	•	•	•	•
Protocols					
Modbus RTU, Modbus TCP, Modbus RTU over Ethernet	•	•	•	•	•
Modbus Gateway for Master-Slave configuration	•	•	•	•	•
Profibus DP V0	-	-	-	•	•
HTTP (homepage configurable)	•	•	•	•	•
SMTP (email)	•	•	•	•	•
NTP (time synchronisation)	•	•	•	•	•
TFTP	•	•	•	•	•
FTP (File-Transfer)	•	•	•	•	•
SNMP	•	•	•	•	•
DHCP	•	•	•	•	•
TCP/IP	•	•	•	•	•
BACnet (optional)	•	•	•	•	•
ICMP (Ping)	•	•	•	•	•
Device options					
Emax function (peak demand management)					
BACnet communication	**52.16.081**	**52.16.081**	**52.16.081**	**52.16.081**	**52.16.081**

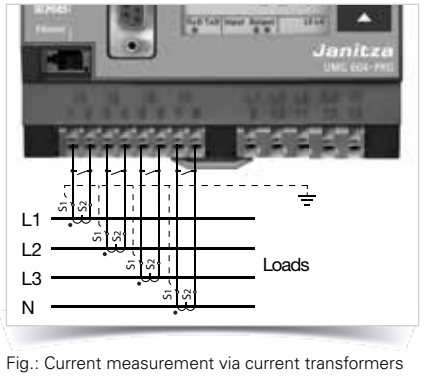

Fig.: Current measurement via current transformers

General	
Use in low and medium voltage networks	•
Accuracy voltage measurement	0.2 %
Accuracy current measurement	0.25 %
Accuracy active energy (kWh, .../5 A)	Class 0.5S
Number of measurement points per period	400
Uninterrupted measurement	•
RMS - momentary value	
Current, voltage, frequency	•
Active, reactive and apparent power / total and per phase	•
Power factor / total and per phase	•
Energy measurement	
Active, reactive and apparent energy [L1,L2,L3, L4, ∑ L1–L3, ∑ L1–L4]	•
Number of tariffs	8
Recording of the mean values	
Voltage, current / actual and maximum	•
Active, reactive and apparent power / actual and maximum	•
Frequency / actual and maximum	•
Demand calculation mode (bi-metallic function) / thermal	•
Other measurements	
Clock	•
Weekly timer	Jasic®

Comment:
For detailed technical information please refer to the operation manual and the Modbus address list.

• = included - = not included

Power quality measurements	
Harmonics per order / current and voltage	1st – 40th
Harmonics per order / active and reactive power	1st – 40th
Distortion factor THD-U in %	•
Distortion factor THD-I in %	•
Voltage unbalance	•
Current and voltage, positive, zero and negative sequence component	•
Transients	50 µs
Error / event recorder function	•
Short-term interruptions	20 ms
Oscillogram function (waveform U and I)	•
Full wave effective values (U, I, P, Q)	•
Under and overvoltage recording	•
Measured data recording	
Memory (Flash)	128 MB
Average, minimum, maximum values	•
Measured data channels	8
Alarm messages	•
Time stamp	•
Time basis average value	freely user-defined
RMS averaging, arithmetic	•
Displays and inputs / outputs	
LCD display	•
Digital inputs	2
Digital outputs (as switch or pulse output)	2
Thermistor input (PT100, PT1000, KTY83, KTY84)	•
Voltage and current inputs	each 4
Password protection	•
Peak load management (optionally 64 channels)	•
Software GridVis®-Basic*1	
Online and historic graphs	•
Databases (Janitza DB, Derby DB); MySQL, MS SQL with higher GridVis® versions)	•
Manual reports (energy, power quality)	•
Graphical programming	•
Topology views	•
Manual read-out of the measuring devices	•
Graph sets	•
Programming / threshold values / alarm management	
Application programs freely programmable	7
Graphical programming	•
Programming via source code Jasic®	•

Technical data	
Type of measurement	Constant true RMS Up to 40th harmonic
Nominal voltage, three-phase, 4-conductor (L-N, L-L)	277 / 480 V AC
Nominal voltage, three-phase, 3-conductor (L-L)	480 V AC
Measurement in quadrants	4
Networks	TN, TT, IT
Measurement in single-phase/multi-phase networks	1 ph, 2 ph, 3 ph, 4 ph and up to 4 times 1 ph
Measured voltage input	
Overvoltage category	300 V CAT III
Measured range, voltage L-N, AC (without potential transformer)	0*2 ... 600 Vrms
Measured range, voltage L-L, AC (without potential transformer)	0*2 ... 1,000 Vrms
Resolution	0.01 V
Impedance	4 MOhm / phase
Frequency measuring range	45 ... 65 Hz
Power consumption	approx. 0.1 VA
Sampling frequency	20 kHz / phase
Transients	> 50 µs

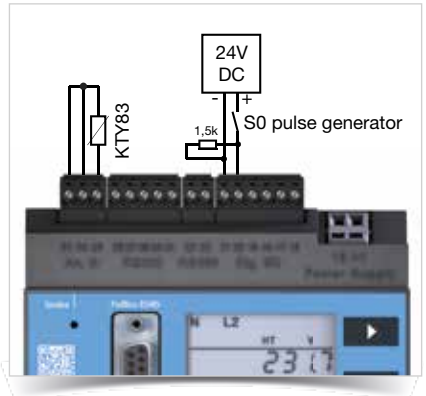

Fig.: Example temperature input (KTY83) and S0 pulse transducer

Comment:
For detailed technical information please refer to the operation manual and the Modbus address list.

• = included - = not included

*1 Optional additional functions with the packages GridVis®-Professional, GridVis®-Service and GridVis®-Ultimate.
*2 The UMG device can only determine measured values if at least one voltage measurement input has an L-N voltage of greater than 10 Veff or an L-L voltage of greater than 18 Veff.

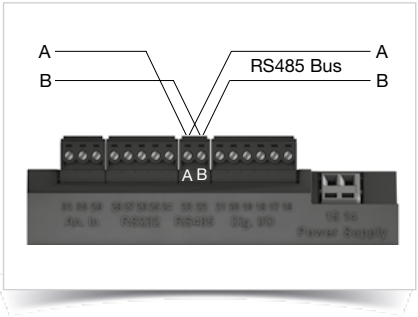

Fig.: RS485 interface, 2 pin plug contact

Measured current input	
Rated current	1 / 5 A
Resolution	1 mA
Measurement range	0.005 ... 8.5 Amps
Overvoltage category	300 V CAT III
Measurement surge voltage	4 kV
Power consumption	approx. 0.2 VA (Ri = 5 MOhm)
Overload for 1 sec.	100 A (sinusoidal)
Sampling frequency	20 kHz
Digital inputs and outputs	
Number of digital inputs	2
Maximum counting frequency	20 Hz
Input signal present	18 ... 28 V DC (typical 4 mA)
Input signal not present	0 ... 5 V DC, current < 0.5 mA
Number of digital outputs	2
Switching voltage	max. 60 V DC, 30 V AC
Switching current	max. 50 mA Eff AC / DC
Output of voltage dips	20 ms
Output of voltage exceedance events	20 ms
Pulse output (energy pulse)	max. 20 Hz
Maximum cable length	up to 30 m unscreened, from 30 m screened
Mechanical properties	
Weight	350 g
Device dimensions in mm (H x W x D)	90 x 107.5 x approx. 82
Battery	Type Lithium CR2032, 3 V
Protection class per EN 60529	IP20
Assembly per IEC EN 60999-1 / DIN EN 50022	35-mm DIN rail
Connecting phase (U / I), Single core, multi-core, fine-stranded Terminal pins, core end sheath	 0.08 to 2.5 mm² 1.5 mm²
Environmental conditions	
Temperature range	Operation: K55 (-10 ... +55 °C)
Relative humidity	Operation: 5 to 95 % (at 25 °C)
Operating height	0 ... 2,000 m above sea level
Degree of pollution	2
Installation position	user-defined
Electromagnetic compatibility	
Electromagnetic compatibility of electrical equipment	Directive 2004/108/EC
Electrical appliances for application within particular voltage limits	Directive 2006/95/EC
Equipment safety	
Safety requirements for electrical equipment for measurement, regulation, control and laboratory use – Part 1: General requirements	IEC/EN 61010-1
Part 2-030: Particular requirements for testing and measuring circuits	IEC/EN 61010-2-030
Noise immunity	
Industrial environment	IEC/EN 61326-1
Electrostatic discharge	IEC/EN 61000-4-2
Voltage dips	IEC/EN 61000-4-11
Emissions	
Class B: Residential environment	IEC/EN 61326-1
RFI Field Strength 30 – 1,000 MHz	IEC/CISPR11/EN 55011
Radiated interference voltage 0.15 – 30 MHz	IEC/CISPR11/EN 55011
Safety	
Europe	CE labelling
USA and Canada	UL variants available
Firmware	
Firmware update	Update via GridVis® software. Firmware download (free of charge) from the website: http://www.janitza.com

Comment:
For detailed technical information please refer to the operation manual and the Modbus address list.

• = included - = not included

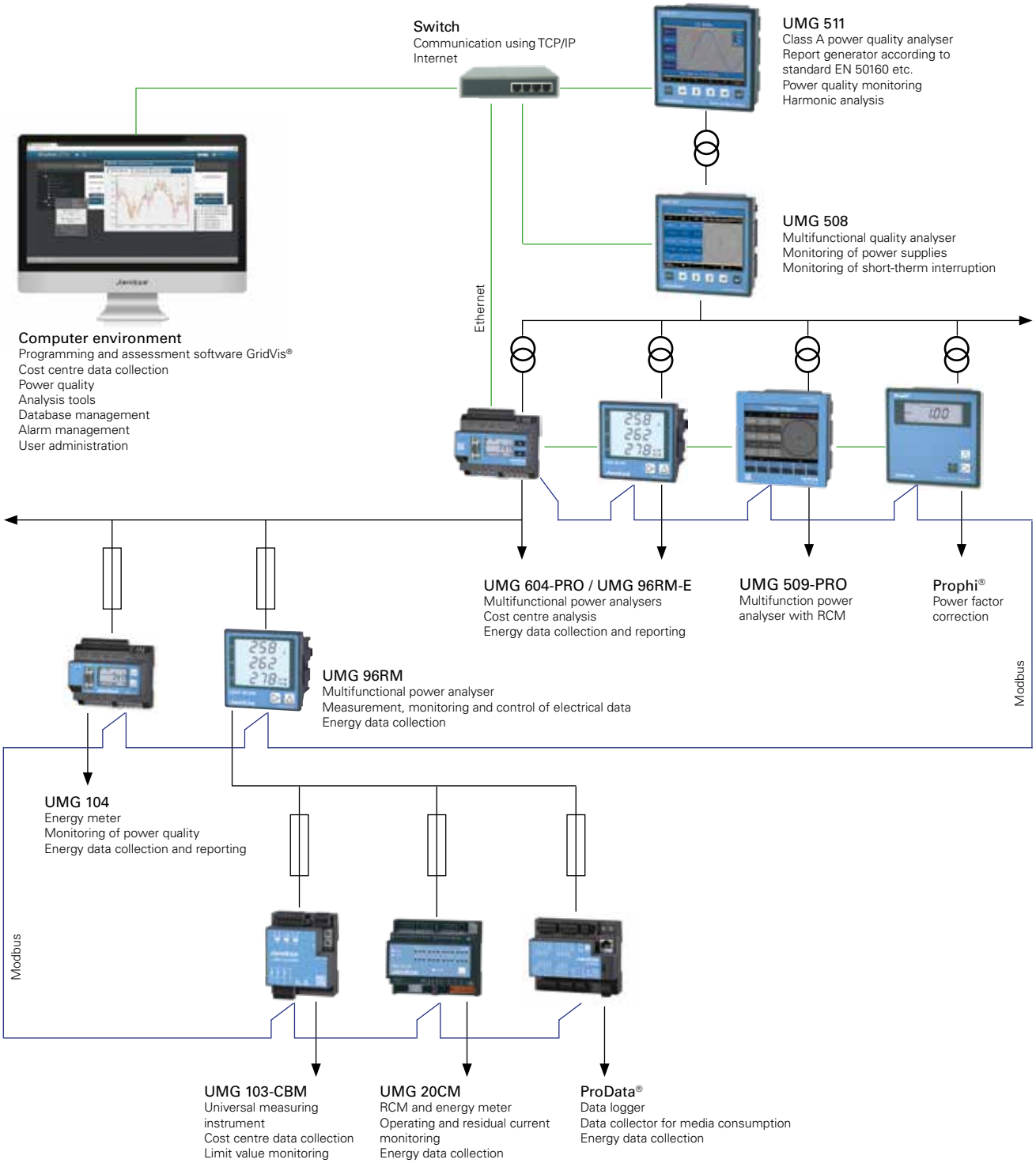
Switch
Communication using TCP/IP
Internet
UMG 511
Class A power quality analyser
Report generator according to standard EN 50160 etc.
Power quality monitoring
Harmonic analysis
UMG 508
Multifunctional quality analyser
Monitoring of power supplies
Monitoring of short-therm interruption
Ethernet
Computer environment
Programming and assessment software GridVis®
Cost centre data collection
Power quality
Analysis tools
Database management
Alarm management
User administration
UMG 604-PRO / UMG 96RM-E
Multifunctional power analysers
Cost centre analysis
Energy data collection and reporting
UMG 509-PRO
Multifunction power analyser with RCM
Prophi®
Power factor correction
Modbus
UMG 96RM
Multifunctional power analyser
Measurement, monitoring and control of electrical data
Energy data collection
UMG 104
Energy meter
Monitoring of power quality
Energy data collection and reporting
Modbus
UMG 103-CBM
Universal measuring instrument
Cost centre data collection
Limit value monitoring
UMG 20CM
RCM and energy meter
Operating and residual current monitoring
Energy data collection
ProData®
Data logger
Data collector for media consumption
Energy data collection

UMG 605-PRO

Power quality analysers for DIN rails

Harmonics

Flicker

Email

Alarm management

Reporting

Memory 128 MByte

Communication
- Profibus (DP / V0)
- Modbus (RTU, UDP, TCP, Gateway)
- TCP/IP
- BACnet (optional)
- HTTP (configurable homepage)
- FTP (file transfer)
- TFTP
- NTP (time synchronisation)
- SMTP (email function)
- DHCP
- SNMP

Interfaces
- Ethernet
- RS232
- RS485 (Modbus)
- RS485 (DSUB9) for Profibus

Accuracy of measurement
- Energy: Class 0.5S (... / 5 A)
- Current: 0.2 %
- Voltage: 0.2 %

Peak demand management (optional)
- Up to 64 switch-off stages

Power quality
- Harmonics up to the 63rd harmonic, direct / indirect
- Flicker measurement
- Short-term interruptions (> 10 ms)
- Transient recorder (> 50 µs)
- Starting currents
- Unbalance
- Half wave RMS recordings (up to 4.5 min.)

Networks
- IT, TN, TT networks
- 3 and 4-phase networks
- Up to 4 single-phase networks

Measured data memory
- 128 MByte Flash

Programming language
- Jasic®

2 digital inputs
- Pulse input
- Logic input
- State monitoring
- HT / LT switching

2 digital outputs
- Pulse output kWh / kvarh
- Switch output
- Threshold value output
- Logic output*

*(expandable via external I/O modules)

Temperature measurement
- PT100, PT1000, KTY83, KTY84

Network visualisation software
- Free GridVis®-Basic

Areas of application

- Power quality monitoring
- Ethernet gateway for subordinate measurement points
- Analysis of electrical disturbances in the event of network problems
- Report generator for various power quality standards
- Control tasks e.g. depending on measured value or limit values being reached
- Measured value transducer for building management systems or PLC

Main features

Power quality

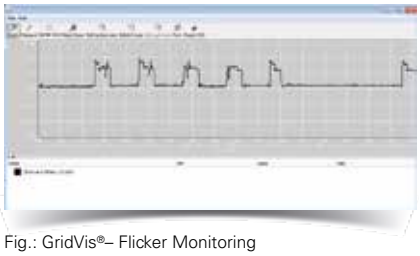

Fig.: GridVis®– Flicker Monitoring

- Continuous power quality monitoring (e.g. EN 50160)
- Harmonics analysis up to the 63rd harmonic, even and odd
- Interharmonics
- Distortion factor THD-U / THD-I
- Measurement of positive, negative and zero sequence component
- Flicker measurement in accordance with DIN EN 61000-4-15
- Logging and storage of transients (> 50 µs)
- Recording of short-term interruptions (> 10 ms)
- Monitoring start-up processes
- Recorder for limit value events

Power

- 4 voltage and 4 current measurement inputs
- Logging and digitalisation of effective values (true RMS) of currents and voltages (15 – 440 Hz)
- Continuous sampling of the voltage and current measurement inputs at 20 kHz
- Recording of over 2,000 measured values per measurement cycle (200 ms)
- Stipulation of nominal current possible for measuring current events
- Fourth current measurement input is suitable for measuring the current in the neutral or PE conductor or for measuring any potential difference between N and PE.
- Large measured data memory (memory range = 5 000 000 measured values)
- Simple remote polling of measured data via the device's own homepage
- All interfaces can be used simultaneously
- Up to 4 ports can be accessed simultaneously

Impressive reporting with GridVis®

- Automatic generation and sending of power quality reports
- Power quality reports per EN 50160, EN 61000-2-4, IEEE519
- Illustration of the ITI-(CBEMA) curve
- Freely definable time planning for the generation of reports

Fig.: Automatic reporting

Modern communications architecture via Ethernet

- Rapid, cost-optimised and reliable communication through integration into an existing Ethernet architecture
- Integration in PLC systems and building management systems
- High flexibility due to the use of open standards
- Simultaneous polling of interfaces possible

Ethernet-Modbus gateway

- Simple integration of Modbus-RTU devices into an Ethernet architecture through the Modbus gateway function
- Integration of devices with identical file formats and matching function codes possible via Modbus RTU interface

Powerful alarm management

- Can be programmed via the graphic programming or Jasic® source code
- All measured values can be used
- Can be arbitrarily, mathematically processed
- Individual forwarding via email sending, switching of digital outputs, writing to Modbus addresses etc.
- Watchdog APP
- Further alarm management functions via GridVis®-Service alarm management

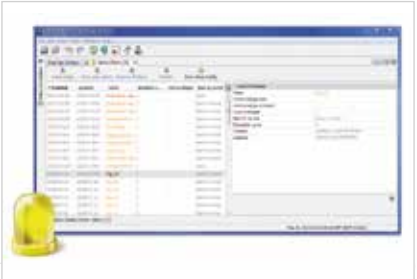

Fig.: Alarm management, alarm list (logbook)

High-speed Modbus

- Fast and reliable data exchange via RS485 interface
- Speed up to 921.6 kB/s

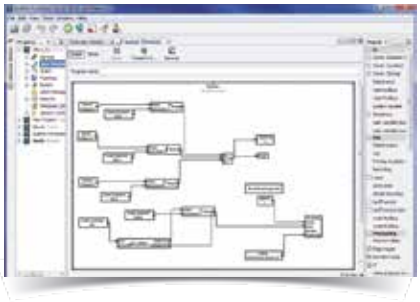

Fig.: Graphical programming

Graphical programming

- Comprehensive programming options on the device, 7 programs simultaneously (PLC functionality)
- Jasic® source code programming
- Functional expansions far beyond pure measurement
- Complete APPs from the Janitza library

Fig.: Illustration of the online data via the device's own homepage

Convenient home page and email functions

- Information can be received conveniently by email and via the device homepage
- Access to powerful device homepage via web browser
- Online data, historical data, graphs, events and much more, is available direct from the homepage

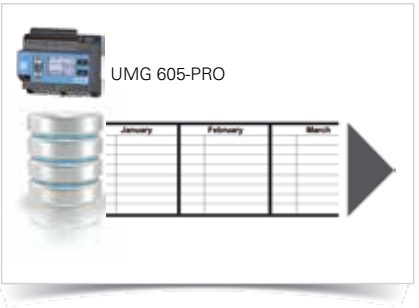

Fig.: Large measurement data memory

Large measurement data memory

- 128 MByte
- 5,000,000 saved values
- Recording range up to 2 years
- Recording freely configurable by the user

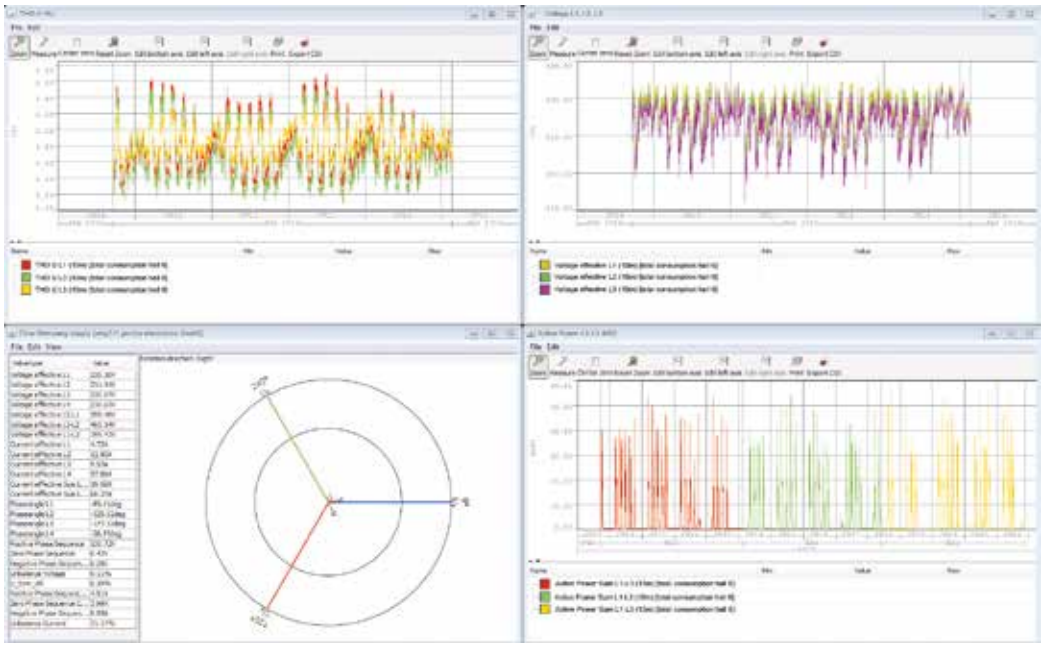

Fig.: GridVis® Graphset with THD-U, voltage, phasor diagram and load profile (kW)

Dimension diagrams

All dimensions in mm

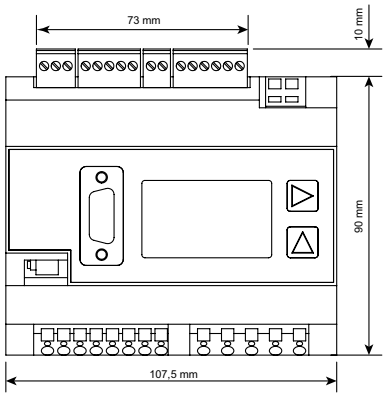

Front view

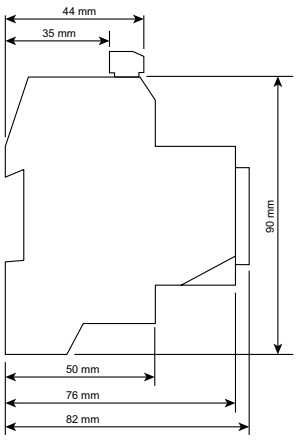

Side view

Typical connection

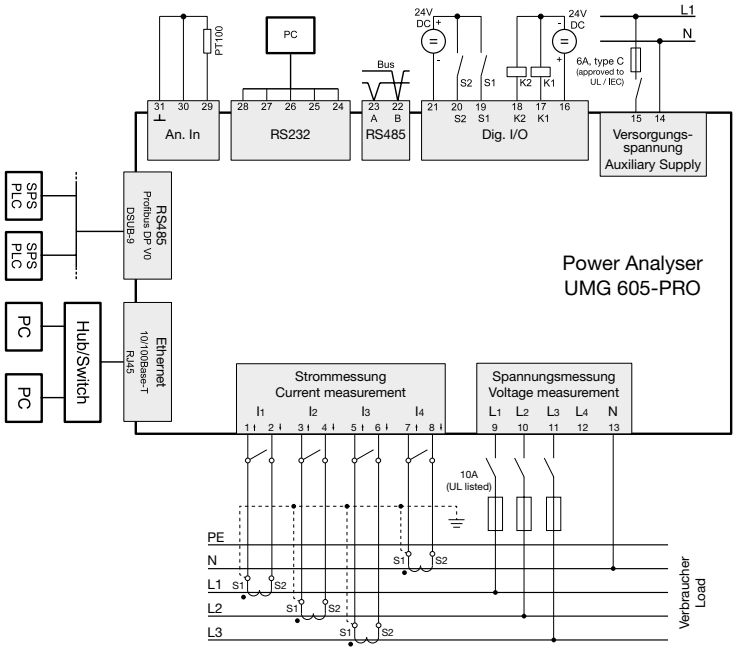

Device overview and technical data

	UMG 605-PRO		
Item number		**52.16.028**	
Item number (UL)	**52.16.227**	**-**	**52.16.229**
Supply voltage AC	95 ... 240 V AC	50 ... 110 V AC	20 ... 50 V AC
Supply voltage DC	135 ... 340 V DC	50 ... 155 V DC	20 ... 70 V DC
Device options			
Emax function (peak demand management)	**52.16.084**	**52.16.084**	**52.16.084**
BACnet communication	**52.16.083**	**52.16.083**	**52.16.083**

General	
Use in low and medium voltage networks	•
Accuracy voltage measurement	0.2 %
Accuracy current measurement	0.25 %
Accuracy active energy (kWh, .../5 A)	Class 0.5S
Number of measurement points per period	400
Uninterrupted measurement	•
RMS - momentary value	
Current, voltage, frequency	•
Active, reactive and apparent power / total and per phase	•
Power factor / total and per phase	•
Energy measurement	
Active, reactive and apparent energy [L1,L2,L3, L4, ∑ L1–L3, ∑ L1–L4]	•
Number of tariffs	8
Recording of the mean values	
Voltage, current / actual and maximum	•
Active, reactive and apparent power / actual and maximum	•
Frequency / actual and maximum	•
Demand calculation mode (bi-metallic function) / thermal	•
Other measurements	
Operating hours measurement	•
Clock	•
Weekly timer	Jasic®
Power quality measurements	
Harmonics per order / current and voltage	1st – 63rd
Harmonics per order / active and reactive power	1st – 63rd
Interharmonics - current / voltage	•
Distortion factor THD-U in %	•
Distortion factor THD-I in %	•
Voltage unbalance	•
Current and voltage, positive, zero and negative sequence component	•
Flicker: Short-term, long-term, present	•
Transients	50 µs
Error / event recorder function	•
Short-term interruptions	> 10 ms
Oscillogram function (waveform U and I)	•
Under and overvoltage recording	•
Measured data recording	
Memory (Flash)	128 MB
Average, minimum, maximum values	•
Measured data channels	8
Alarm messages	•
Time stamp	•
Time basis average value	freely user-defined
RMS averaging, arithmetic	•

Comment:
For detailed technical information please refer to the operation manual and the Modbus address list.

• = included - = not included

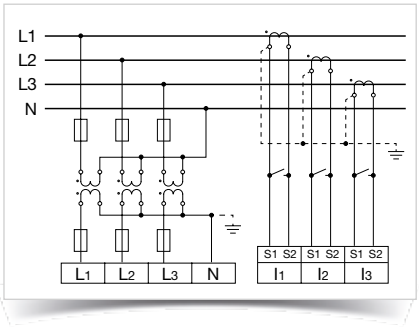

Fig.: Measurement via 3 voltage transformers in a three-phase 4-wire network with asymmetric loading

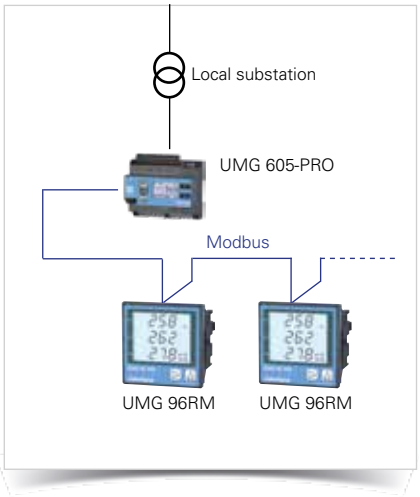

Fig.: Example of a master - slave combination

Displays and inputs / outputs	
LCD display	•
Digital inputs	2
Digital outputs (as switch or pulse output)	2
Thermistor input (PT100, PT1000, KTY83, KTY84)	•
Voltage and current inputs	each 4
Password protection	•
Peak load management (optionally 64 channels)	•
Communication	
Interfaces	
RS485: 9.6 – 921.6 kbps (Screw-type terminal)	•
RS232: 9.6 – 115.2 kbps (Screw-type terminal)	•
Profibus DP: Up to 12 Mbps (DSUB-9 connector)	•
Ethernet 10/100 Base-TX (RJ-45 socket)	•
Protocols	
Modbus RTU, Modbus TCP, Modbus RTU over Ethernet	•
Modbus Gateway for Master-Slave configuration	•
Profibus DP V0	•
HTTP (homepage configurable)	•
SMTP (email)	•
NTP (time synchronisation)	•
TFTP	•
FTP (File-Transfer)	•
SNMP	•
DHCP	•
TCP/IP	•
• BACnet (optional)	•
ICMP (Ping)	•
Software GridVis®-Basic*1	
Online and historic graphs	•
Databases (Janitza DB, Derby DB); MySQL, MS SQL with higher GridVis® versions)	•
Manual reports (energy, power quality)	•
Graphical programming	•
Topology views	•
Manual read-out of the measuring devices	•
Graph sets	•
Programming / threshold values / alarm management	
Application programs freely programmable	7
Graphical programming	•
Programming via source code Jasic®	•

Technical data	
Type of measurement	Constant true RMS up to the 63rd harmonic
Nominal voltage, three-phase, 4-conductor (L-N, L-L)	277 / 480 V AC
Nominal voltage, three-phase, 3-conductor (L-L)	480 V AC
Measurement in quadrants	4
Networks	TN, TT, IT
Measurement in single-phase/multi-phase networks	1 ph, 2 ph, 3 ph, 4 ph and up to 4 times 1 ph
Measured voltage input	
Overvoltage category	300 V CAT III
Measured range, voltage L-N, AC (without potential transformer)	10 ... 600 Vrms
Measured range, voltage L-L, AC (without potential transformer)	18 ... 1000 Vrms
Resolution	0.01 V
Impedance	4 MOhm / phase
Frequency measuring range	15 ... 440 Hz
Power consumption	approx. 0.1 VA
Sampling frequency	20 kHz / phase
Transients	> 50 µs

Comment:
For detailed technical information please refer to the operation manual and the Modbus address list.

• = included - = not included

*1 Optional additional functions with the packages GridVis®-Professional, GridVis®-Service and GridVis®-Ultimate.

Measured current input	
Rated current	1 / 5 A
Resolution	1 mA
Measurement range	0.005 ... 8.5 Arms
Overvoltage category	300 V CAT III
Measurement surge voltage	4 kV
Power consumption	approx. 0.2 VA (Ri = 5 MOhm)
Overload for 1 sec.	100 A (sinusoidal)
Sampling frequency	20 kHz
Digital inputs and outputs	
Number of digital inputs	2
Maximum counting frequency	20 Hz
Reaction time (Jasic® program)	200 ms
Input signal present	18 ... 28 V DC (typical 4 mA)
Input signal not present	0 ... 5 V DC, current < 0.5 mA
Number of digital outputs	2
Switching voltage	max. 60 V DC, 30 V AC
Switching current	max. 50 mA Eff AC / DC
Reaction time (Jasic® program)	200 ms
Output of voltage dips	10 ms
Pulse output (energy pulse)	max. 20 Hz
Maximum cable length	up to 30 m unscreened, from 30 m screened
Mechanical properties	
Weight	350 g
Device dimensions in mm (H x W x D)	90 x 107.5 x approx. 82
Battery	Type Lithium CR2032, 3 V
Protection class per EN 60529	IP20
Assembly per IEC EN 60999-1 / DIN EN 50022	35 mm DIN mounting rails
Connecting phase (U / I), Single core, multi-core, fine-stranded Terminal pins, core end sheath	 0.08 to 2.5 mm² 1.5 mm²
Environmental conditions	
Temperature range	Operation: K55 (-10 ... +55 °C)
Relative humidity	Operation: 5 to 95 % (at 25 °C)
Operating height	0 ... 2,000 m above sea level
Degree of pollution	2
Installation position	user-defined
Electromagnetic compatibility	
Electromagnetic compatibility of electrical equipment	Directive 2004/108/EC
Electrical appliances for application within particular voltage limits	Directive 2006/95/EC
Equipment safety	
Safety requirements for electrical equipment for measurement, regulation, control and laboratory use – Part 1: General requirements	IEC/EN 61010-1
Part 2-030: Particular requirements for testing and measuring circuits	IEC/EN 61010-2-030
Noise immunity	
Industrial environment	IEC/EN 61326-1
Electrostatic discharge	IEC/EN 61000-4-2
Voltage dips	IEC/EN 61000-4-11
Emissions	
Class A: Industrial environment	IEC/EN 61326-1
RFI Field Strength 30 – 1,000 MHz	IEC/CISPR11/EN 55011
Radiated interference voltage 0.15 – 30 MHz	IEC/CISPR11/EN 55011
Safety	
Europe	CE labelling
USA and Canada	UL variants available
Firmware	
Firmware update	Update via GridVis® software. Firmware download (free of charge) from the website: http://www.janitza.com

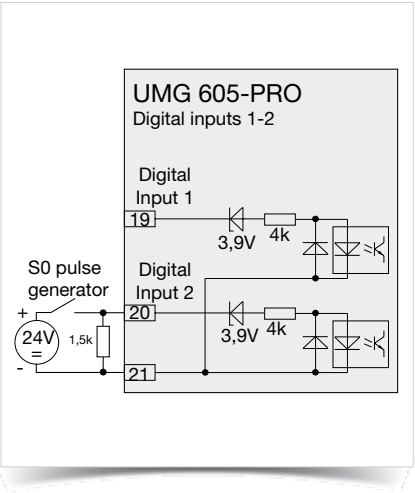

Fig.: Example for the connection of an S0 pulse transducer to digital input 2

Comment:
For detailed technical information please refer to the operation manual and the Modbus address list.

• = included - = not included

UMG 96L / UMG 96

Universal measurement device

Threshold value monitoring

Pulse outputs

Measuring accuracy
- Energy: Class 2
- Current .../1 A, .../5 A
- Voltage L - N: ± 1 %

Networks
- TN-, TT-Networks

2 digital outputs (UMG 96)
- Pulse output kWh / kvarh
- Switch output

Areas of application

- Replaces analogue measurement devices
- Display and checking of electrical characteristics in energy distribution systems
- Limit value monitoring

Main features

Display selection and automatic display rotation

- Generous LCD display
- All measured values can be called up in factory setting
- Measured values that are not required can be hidden and displayed again

Fig.: Effective power, all three phases at a glance

Operating hours counter

- The operating hours counter is active as soon as the device is switched on
- The time is measured with a resolution of 15 minutes
- Display in hours mode

Digital outputs for reactive or active energy

- Transmission of the reactive and active energy via digital outputs
- The active energy should be assigned to output 1 and the reactive energy to output 2

Digital outputs for threshold values (UMG 96)

- Digital outputs also suitable for use as switch outputs
- Programming the digital outputs for threshold monitoring of measurement data
- Assignment of a measured value (threshold value) per switch output
- The associated output reacts in response to the value exceeding or dropping below the threshold value
- Transistor outputs

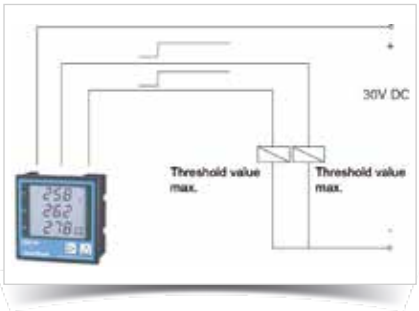

Fig.: Digital output for threshold value monitoring

Password

- 3-digit password protects against unauthorised changing of the programming and configurations
- Changes in the following program menus can only be implemented after entering the correct user password
- Password is not factory-programmed

Fig.: Password protection

Dimension diagrams

All dimensions in mm

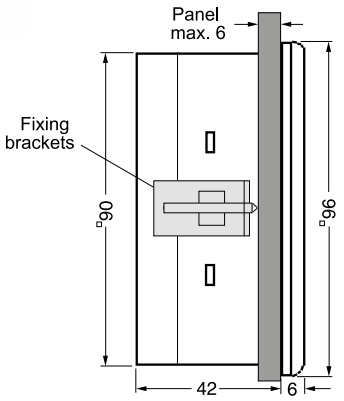

Side view UMG 96L / UMG 96

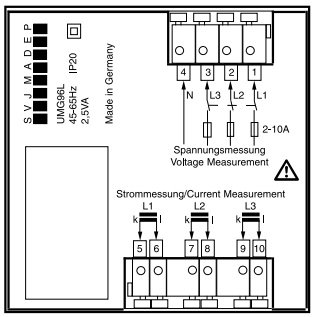

Rear view UMG 96L

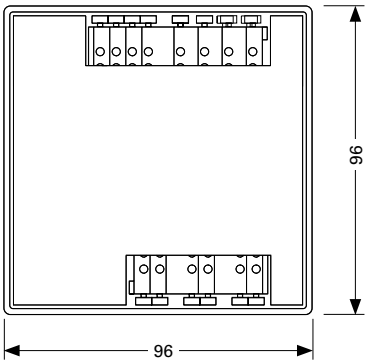

Rear view UMG 96

Cut out: $92^{+0,8}$ x $92^{+0,8}$ mm

Typical connection

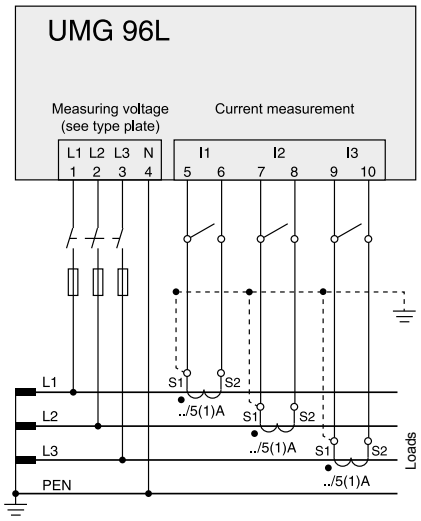

UMG 96L

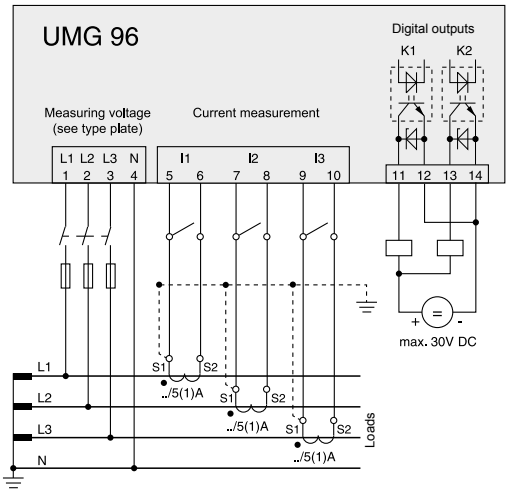

UMG 96 with 2 digital outputs

Device overview and technical data

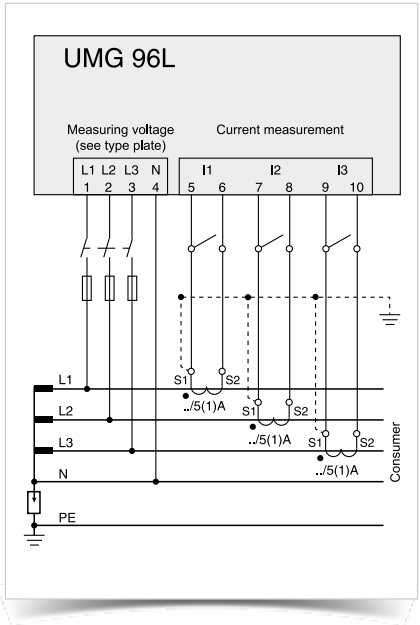

Fig.: Example connection via three current transformers (UMG 96L)

	UMG 96L	UMG 96
Item number	**52.14.001**	**52.09.001**
Measured voltage	230 / 400 V AC	275 / 476 V AC
Operating voltage	196 ... 255 V AC	196 ... 275 V AC
Measured voltage input		
Overvoltage category	300 V CAT III	300 V CAT III
Measured range, voltage L-N, AC (without potential transformer)	50 ... 255 V AC	50 ... 275 V AC
Measured range, voltage L-L, AC (without potential transformer)	87 ... 442 V AC	87 ... 476 V AC
Digital outputs		
Number of digital outputs	-	2
General		
Accuracy voltage measurement	1 %	1 %

General	
Use in low and medium voltage networks	•
Accuracy current measurement	1 %
Accuracy active energy (kWh, .../5 A)	Class 2
Number of measurement points per period	50
RMS - momentary value	
Current, voltage, frequency	•
Active, reactive and apparent power / total and per phase	•
Power factor / total and per phase	•
Energy measurement	
Active, reactive energy [∑ L1–L3]	•
Recording of the mean values	
Voltage, current / actual and maximum	•
Active, reactive and apparent power / actual and maximum	•
Frequency / actual and maximum	•
Other measurements	
Operating hours measurement	•
Technical data	
Measurement in quadrants	4
Networks	TN, TT
Measured voltage input	
Frequency measuring range	45 ... 65 Hz
Power consumption	approx. 0.1 VA / approx. 0.2 VA
Sampling frequency (50 Hz)	2.5 kHz / phase
Measured current input	
Rated current	1 / 5 A
Measurement range	0.005 ... 6 Arms
Overvoltage category	CAT III
Measurement surge voltage	4 kV
Power consumption	approx. 0.2 VA
Overload for 2 sec.	180 A (sinusoidal)
Sampling frequency (50/60 Hz)	2.5 / 3 kHz / Phase
Digital outputs*1	
Switching voltage	max. 60 V DC, 5 – 24 V DC
Switching current	max. 50 mA Eff AC / DC
Pulse output (energy pulse)	max. 10 Hz
Maximum cable length	up to 30 m unscreened, from 30 m screened
Mechanical properties	
Weight	250 g
Device dimensions in mm (H x W x D)	96 x 96 x 48
Protection class per EN 60529	Front: IP40, Rear: IP20
Assembly per IEC EN 60999-1 / DIN EN 50022	Front panel installation
Connecting phase (U / I), Single core, multi-core, fine-stranded Terminal pins, core end sheath	 0.08 to 2.5 mm² 1.5 mm²

Comment:
For detailed technical information please refer to the operation manual and the Modbus address list.

• = included - = not included

*1 Refers exclusively to the UMG 96.

Environmental conditions	
Temperature range	Operation: K55 (-10 ... +55 °C)
Relative humidity	Operation: 15 to 95 % (at 25 °C)
Operating height	0 ... 2,000 m above sea level
Degree of pollution	2
Installation position	user-defined
Electromagnetic compatibility	
Electromagnetic compatibility of equipment	Directive 89/336/EEC
Electrical equipment for use within certain voltage limits	Directive 73/23/EEC
Equipment safety	
Safety requirements for electrical equipment for measurement, regulation, control and laboratory use – Part 1: General requirements	IEC/EN 61010-1
Part 2-030: Particular requirements for testing and measuring circuits	IEC/EN 61010-2-030
Noise immunity	
Industrial environment	IEC/EN 61326-1
Electrostatic discharge	IEC/EN 61000-4-2
Voltage dips	IEC/EN 61000-4-11
Emissions	
Class B: Residential environment	IEC/EN 61326-1
Radio disturbanc voltage strength 30 – 1000 MHz	IEC/CISPR11/EN 55011
Radiated interference voltage 0.15 – 30 MHz	IEC/CISPR11/EN 55011
Safety	
Europe	CE labelling

Comment:
For detailed technical information please refer to the operation manual and the Modbus address list.

• = included - = not included

UMG 96RM

Multifunction power analyser

Memory 256 MB

Harmonics

Measurement accuracy 0.5

8 Tariffs

Pulse inputs and outputs

Communication (device-specific)
- Modbus (RTU)
- Profibus DP V0
- Profinet
- TCP/IP
- M-Bus

Interfaces
- RS485 (UMG 96RM, UMG 96RM-P, UMG 96RM-CBM)
- Profibus (UMG 96RM-P)
- Profinet (UMG 96RM-PN)
- M-Bus (UMG 96RM-M)
- Ethernet (UMG 96RM-EL)
- USB (UMG 96RM-P, UMG 96RM-CBM)

Accuracy of measurement
- Energy: Class 0.5S (... / 5 A)
- Current: 0.2 %
- Voltage: 0.2 %

Power quality
- Harmonics up to 40th harmonic
- Rotary field components
- Distortion factor THD-U / THD-I
- Waveform display (UMG 96RM-EL) via GridVis®-Basic software

Networks
- TN, TT, IT networks
- 3 and 4-phase networks
- Up to 4 single-phase networks

Measured data memory (UMG 96RM-CBM, UMG 96RM-P)
(UMG 96RM, UMG 96RM-M und UMG 96RM-EL without measurement data memory, energy, minimum and maximum values will be saved in the EEPROM)
- 256 MB Flash

Up to 4 digital inputs
- Pulse input
- Logic input
- State monitoring

Up to 6 digital outputs
- Pulse output kWh / kvarh
- Switch output
- Threshold value output
- Logic output
- Remote via Modbus / Profibus

Network visualisation software
- Free GridVis®-Basic

Areas of application

- Measurement, monitoring and checking of electrical characteristics in energy distribution systems
- Recording of load profiles for energy management systems (e.g. ISO 50001)
- Acquisition of the energy consumption for cost centre analysis
- Measured value transducer for building management systems or PLC (Modbus)

Main features

Particular advantages

- Compact construction saves space and costs during installation
- Seamless and sustained recording thanks to large measured data memory or via the online data acquisition (e.g. GridVis®-Service)
- High data security and redundancy
- Comprehensive communications options and protocols
- Multifaceted, pre-defined reports for power quality and energy consumption analysis (via GridVis®-Service)
- Simple report generation at the press of a button or automatically in accordance with defined time plans
- Precision measurement results provide an effective infrastructure as well as high production availability
- Generic Modbus profile: Arbitrary Modbus-capable devices and systems from other manufacturers can be incorporated and visualised in the monitoring solutions
- Long-term availability of the measurement devices guarantees simple retrofitting with system expansions

Energy data acquisition & load profile

- Detailed acquisition of the energy data and the load profile
- More transparency in energy supply through energy analyses
- Safer design of the power distribution systems

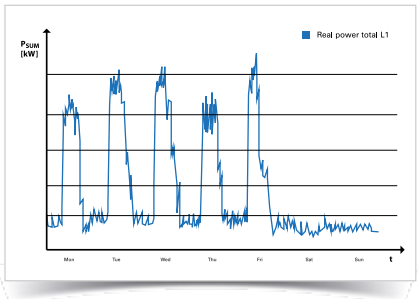

Fig.: Load profiles are the basis for energy management

Cost centre analysis

- Determination of energy costs
- Breakdown and allocation of energy consumers

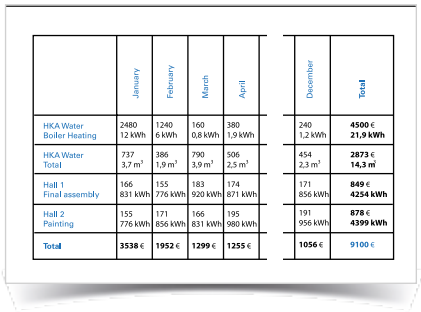

	January	February	March	April	December	Total
HKA Water Boiler Heating	2480 12 kWh	1240 6 kWh	160 0,8 kWh	380 1,9 kWh	240 1,2 kWh	**4500 €** **21,9 kWh**
HKA Water Total	737 3,7 m³	386 1,9 m³	790 3,9 m³	506 2,5 m³	454 2,3 m³	**2873 €** **14,3 m³**
Hall 1 Final assembly	166 831 kWh	155 776 kWh	183 920 kWh	174 871 kWh	171 856 kWh	**849 €** **4254 kWh**
Hall 2 Painting	155 776 kWh	171 856 kWh	166 831 kWh	195 980 kWh	191 956 kWh	**878 €** **4399 kWh**
Total	**3538 €**	**1952 €**	**1299 €**	**1255 €**	**1056 €**	**9100 €**

Fig.: Cost centre analysis

Energy management systems (ISO 50001)

- Continuous increase in energy efficiency
- Cost reduction
- UMG 96RM series multifunctional power analysers are an important part of energy management systems

Transparency of energy supply

- More transparency through a multi-stage, scalable measurement system
- Acquisition of individual events through continuous measurement with high resolution

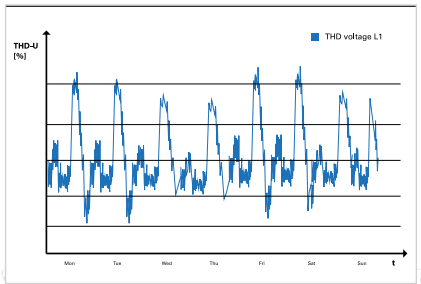

Fig.: Transparency of energy supply

Power quality monitoring

- Notification of inadequate power quality
- Introduction of measures to address network problems
- Prevention of production downtimes
- Significantly longer service life for equipment
- Improved sustainability

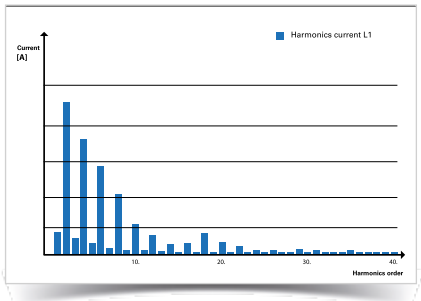

Fig.: Power quality monitoring
(Harmonics analysis for the current up to 40th order harmonics)

Measurement accuracy of 0.2 % (V), kWh class = 0.5S

- High sampling rate at 21.3 kHz
- Reliable measurement accuracy of 0.2 % (V)
- Effective energy class (kWh): 0.5S

Energy meter with 8 tariffs, effective and reactive energy

- Energy measurement in 4 quadrants, each with 8 tariffs for effective and reactive energy
- Safe and precise acquisition of operational values for individual electrical loads

Communications options: Ethernet, Profibus, Modbus, M-Bus, ...

- Numerous interfaces and protocols, guaranteeing an easy system connection (energy management system, PLC, SCADA, BMS)

Large measurement data memory

- Saving of measurement data possible over very long periods of time
- Recording freely user configurable

Harmonics analyser

- Harmonics analysis up to 40th harmonic
- Information about power quality, grid disturbances and possible "network polluters"

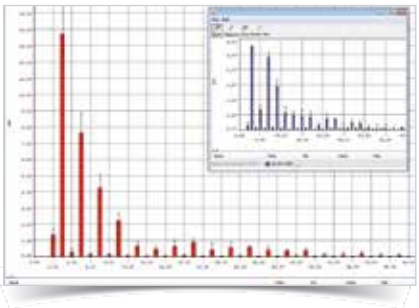

Fig.: GridVis® software: Harmonics analysis

Pluggable screw terminals

- Convenient installation even where spaces are tight

Fig.: Pluggable screw terminals for easy connection

Backlight

- Large, high-contrast LCD display with backlighting
- Very good readability and intuitive operation, even in poor lighting conditions

Fig.: LCD Display backlight

Basic device

- RS485 interface with Modbus protocol and 2 digital outputs enable quick and low-cost monitoring of power quality and energy consumption

Profibus and digital IOs

- The Profibus connection is used in systems where the UMG 96RM-P is to be incorporated into the automation environment (PLC controllers)

M-Bus

- The UMG 96RM-M can be simply and cost-effectively integrated into consumption data acquisition systems via the M-Bus connection.
- The M-Bus is primarily used for the acquisition of consumption data collection from various different consumption meters, such as water, gas, heat or electrical current.

Ethernet (TCP/IP) with the UMG 96RM-EL

- Simple integration into the Ethernet (LAN) network
- Fast and reliable data communication

4th current transformer input

- Continuous monitoring of the N-conductor by means of the 4th current input
- Available with variants UMG 96RM-P and UMG 96RM-CBM

Dimension diagrams

All dimensions in mm

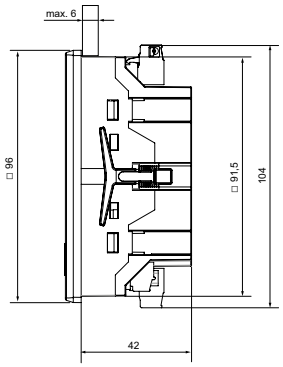

Side view UMG 96RM

Cut out: $92^{+0.8}$ x $92^{+0.8}$ mm

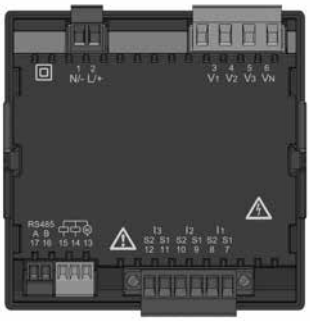

Rear view UMG 96RM (basic device)

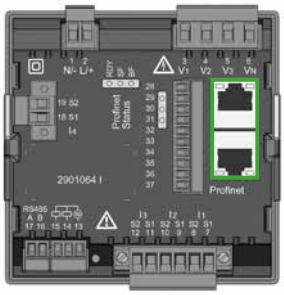

Rear view UMG 96RM-PN
Profinet variant

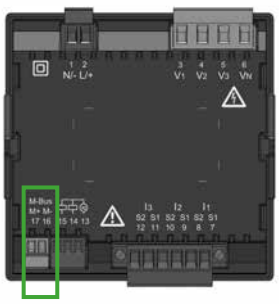

Rear view 96RM-M
M-Bus variant

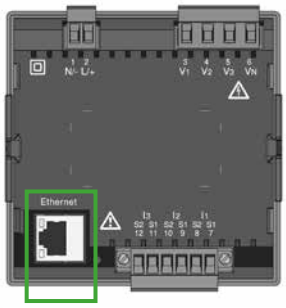

Rear view 96RM-EL
Ethernet light variant

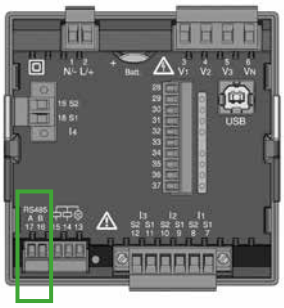

Rear view 96RM-CBM
Modbus variant

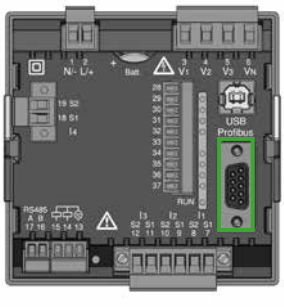

Rear view 96RM-P
Profibus variant

The illustrations shown here are examples. Further dimensional drawings and connection diagrams are available on request or can be viewed on our homepage.

Typical connection

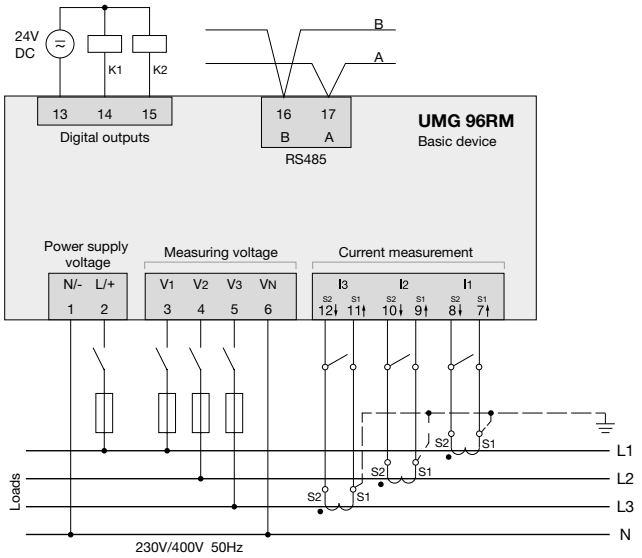

Connection variant UMG 96RM

The illustration shown here is an example.
Further connection diagrams are available on request or can be viewed on our homepage.

Device overview and technical data

	UMG 96RM*1	UMG 96RM-M*1	UMG 96RM-EL*1	UMG 96RM-CBM*1	UMG 96RM-P*1	UMG 96RM-PN*1
Item no. (90–277 V AC/90–250 V DC)	**52.22.061**	**52.22.069**	**52.22.068**	**52.22.066**	**52.22.064**	**52.22.090**
Item no. (24–90 V AC/24–90 V DC)	**52.22.070**	**52.22.073**	**52.22.072**	**52.22.067**	**52.22.065**	**52.22.091**
Interfaces	RS485	M-Bus	Ethernet	RS485, USB	RS485, Profibus, USB	RS485, Ethernet, Profinet
Protocols						
Modbus RTU	•	-	-	•	•	•
Modbus TCP	-	-	•	-	-	•
Profibus DP V0	-	-	-	-	•	-
Profinet	-	-	-	-	-	•
M-Bus	-	•	-	-	-	-
DHCP oder DCP	-	-	•	-	-	•
ICMP (Ping)	-	-	•	-	-	•
Measured data recording						
Current measurement channel	3	3	3	4	4	4 (+2)
Memory (Flash)	-	-	-	256 MB	256 MB	-
Battery	-	-	-	Type CR2032 3 V, Li-Mn	Type CR2032 3 V, Li-Mn	-
Clock	-	-	-	•	•	-
Digital inputs and outputs						
Digital inputs	-	-	-	4	4	3*3
Digital outputs (as switch or pulse output)	2	2	-	6	6	2 (+3)*3
Mechanical properties						
Device dimensions in mm (H x W x D)*2	96 x 96 x approx. 48	96 x 96 x approx. 48	96 x 96 x approx. 48	96 x 96 x approx. 78	96 x 96 x approx. 78	96 x 96 x approx. 78

Comment: For detailed technical information please refer to the operation manual and the Modbus address list.

• = included - = not included

*1 Inclusive UL certification.

*2 Accurate device dimensions can be found in the operation manual.

*3 Optionally 3 digital inputs or outputs (no pulse output)

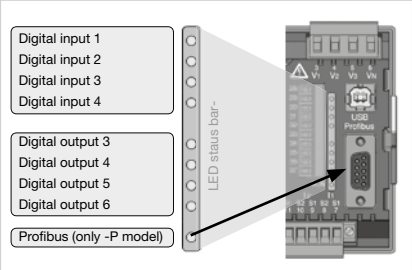

Fig.: LED status bar for the inputs and outputs
(UMG 96RM-CBM and UMG 96RM-P)

Fig.: UMG 96RM-PN with Profinet interface

Fig.: Battery insertion on the rear
(UMG 96RM-CBM and UMG 96RM-P)

General	
Use in low and medium voltage networks	•
Accuracy voltage measurement	0.2 %
Accuracy current measurement	0.2 %
Accuracy active energy (kWh, .../5 A)	Class 0.5S
Number of measurement points per period	426
Uninterrupted measurement	•
RMS - momentary value	
Current, voltage, frequency	•
Active, reactive and apparent power / total and per phase	•
Power factor / total and per phase	•
Energy measurement	
Active, reactive and apparent energy [L1,L2,L3, ∑ L1–L3]	•
Number of tariffs	14
Recording of the mean values	
Voltage, current / actual and maximum	•
Active, reactive and apparent power / actual and maximum	•
Frequency / actual and maximum	•
Demand calculation mode (bi-metallic function) / thermal	•
Other measurements	
Operating hours measurement	•
Power quality measurements	
Harmonics per order / current and voltage	1st – 40th
Distortion factor THD-U in %	•
Distortion factor THD-I in %	•
Rotary field indication	•
Current and voltage, positive, zero and negative sequence component	•
Measured data recording	
Average , minimum, maximum values	•
Alarm messages	•
Time stamp	•
Time basis average value	freely user-defined
RMS averaging, arithmetic	•
Displays and inputs / outputs	
LCD display (with backlighting), 2 buttons	•
Voltage inputs	L1, L2, L3 + N
Password protection	•
Software GridVis®-Basic*4	
Online and historic graphs	•
Databases (Janitza DB, Derby DB); MySQL, MS SQL with higher GridVis® versions)	•
Manual reports (energy, power quality)	•
Topology views	•
Manual read-out of the measuring devices	•
Graph sets	•
Programming / threshold values / alarm management	
Comparator (2 Groups with 3 comparators each)	•

Technical data	
Type of measurement	Constant true RMS Up to 40th harmonic
Nominal voltage, three-phase, 4-conductor (L-N, L-L)	277 / 480 V AC
Nominal voltage, three-phase, 3-conductor (L-L)	480 V AC
Measurement in quadrants	4
Networks	TN, TT, IT

Comment:
For detailed technical information please refer to the operation manual and the Modbus address list.

• = included - = not included

*4 Optional additional functions with the packages GridVis®-Professional, GridVis®-Service and GridVis®-Ultimate.

Measured voltage input	
Overvoltage category	300 V CAT III
Measured range, voltage L-N, AC (without potential transformer)	0*8 ... 300 Vrms
Measured range, voltage L-L, AC (without potential transformer)	0*8 ... 520 Vrms
Resolution	0.01 V
Impedance	3 MOhm / phase
Frequency measuring range	45 ... 65 Hz
Power consumption	approx. 0.1 VA
Sampling frequency per channel (50 / 60 Hz)	21.33 / 25.6 kHz
Measured current input	
Rated current	1 / 5 A
Resolution	0.1 mA
Measurement range	0.005 ... 6 Amps
Overvoltage category	300 V CAT II
Measurement surge voltage	2 kV
Power consumption	approx. 0.2 VA (Ri = 5 mOhm)
Overload for 1 sec.	120 A (sinusoidal)
Sampling frequency per channel (50 / 60 Hz)	21.33 / 25.6 kHz
Digital inputs and outputs	
Digital inputs*5	
Maximum counting frequency	20 Hz
Input signal present	18 ... 28 V DC (typical 4 mA)
Input signal not present	0 ... 5 V DC, current < 0.5 mA
Digital outputs*6	
Switching voltage	max. 60 V DC, 33 V AC
Switching current	max. 50 mA Eff AC / DC
Response time	10 / 12 periods + 10 ms
Pulse output (energy pulse)	max. 50 Hz
Maximum cable length	up to 30 m unscreened, from 30 m screened
Mechanical properties	
Weight	approx. 0.3 kg
Protection class per EN 60529	Front: IP40; Front with seal: IP54; Back: IP20
Assembly per IEC EN 60999-1 / DIN EN 50022	Front panel installation
Cable cross section	
Supply voltage	0.2 to 2.5 mm²
Current measurement	0.2 to 2.5 mm²
Voltage measurement	0.08 to 4.0 mm²
Environmental conditions	
Temperature range	Operation: K55 (-25 ... +70 °C)
Relative humidity	Operation: 0 to 90 % RH
Operating height	0 ... 2000 m above sea level
Degree of pollution	2
Installation position	user-defined
Electromagnetic compatibility	
Electromagnetic compatibility of electrical equipment	Directive 2004/108/EC
Electrical equipment for use within certain voltage limits	Directive 2006/95/EC
Equipment safety	
Safety requirements for electrical equipment for measurement, regulation, control and laboratory use – Part 1: General requirements	IEC/EN 61010-1
Part 2-030: Particular requirements for testing and measuring circuits	IEC/EN 61010-2-030
Noise immunity	
Class A: Industrial environment*7	IEC/EN 61326-1
Electrostatic discharge	IEC/EN 61000-4-2
Voltage dips	IEC/EN 61000-4-11
Emissions	
Class B: Residential environment	IEC/EN 61326-1
Radio disturbanc voltage strength 30 – 1000 MHz	IEC/CISPR11/EN 55011
Radiated interference voltage 0.15 – 30 MHz	IEC/CISPR11/EN 55011
Firmware	
Firmware update	Update via GridVis® software. Firmware download (free of charge) from the website: http://www.janitza.com/downloads

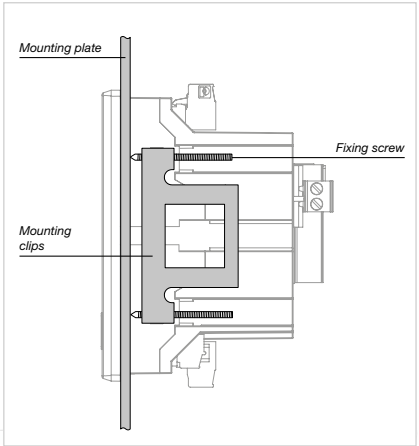

Fig.: The fastening into a switchboard is implemented via the side-mounted fastening clamps (UMG 96RM-P / UMG 96RM-CBM)

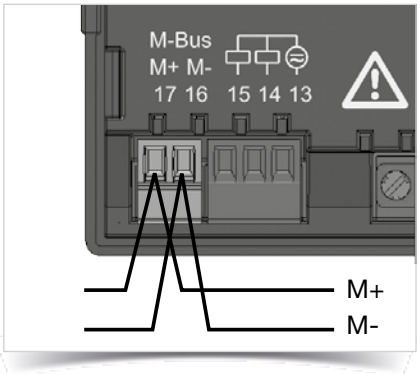

Fig.: M-Bus interface with 2-pole plug contact

Fig.: 2-pole plug contact with cable connection (cable type: 2 x 0.75 mm²) via twin core end sheathes

Comment: For detailed technical information please refer to the operation manual and the Modbus address list

• = included - = not included

*5 The information relates exclusively to the measurement devices UMG 96RM-CBM, UMG 96RM-P and UMG 96RM-PN.
*6 The information relates exclusively to the measurement devices UMG 96RM, UMG 96RM-M, UMG 96RM-CBM, UMG 96RM-P and UMG 96RM-PN.
*7 UMG 96RM-PN exclusive Class A: Industrial environment
*8 The UMG 96RM can only detect measurements when a voltage L1-N greater than 20 V eff (4-wire measurement) at voltage input V1 or a voltage L1-L2 greater than 34 V eff (3-wire measurement) is applied.

UMG 96 RM-E

Power analyser with Ethernet and RCM

Memory 256 MB

Residual current measurement

Ethernet-Modbus gateway

Alarm management

Homepage

BACnet (optional)

Communication
- Modbus (RTU, TCP, Gateway)
- TCP/IP
- HTTP (configurable homepage)
- FTP (file transfer)
- SNMP
- NTP (time synchronisation)
- SMTP (email function)
- DHCP
- SNTP
- TFTP
- BACnet (optional)

Interfaces
- RS485
- Ethernet

Accuracy of measurement
- Energy: Class 0.5S (... / 5 A)
- Current: 0.2 %
- Voltage: 0.2 %

Power quality
- Harmonics up to 40th harmonic
- Rotary field components
- Distortion factor THD-U / THD-I

Networks
- TN, TT, IT networks
- 3 and 4-phase networks
- Up to 4 single-phase networks

Measured data memory
- 256 MB Flash

Temperature measurement
- PT100, PT1000, KTY83, KTY84

2 digital outputs
- Pulse output kWh / kvarh
- Switch output
- Threshold value output
- Logic output
- Remote via Modbus / Profibus

3 digital inputs/outputs
- Usable as either inputs or outputs

2 analogue inputs
- Analogue, temperature or residual current input (RCM)

Network visualisation software
- Free GridVis®-Basic

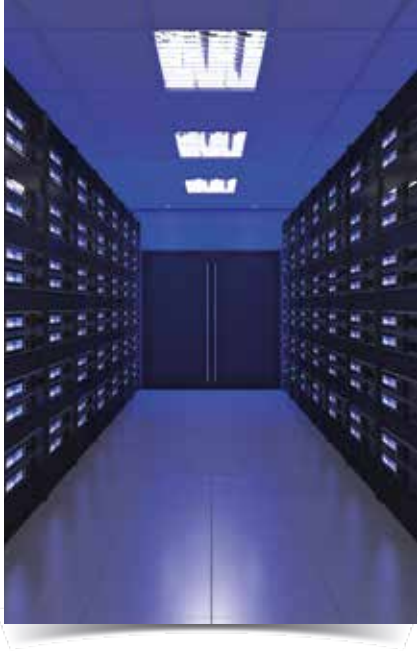

Areas of application

- Measurement, monitoring and checking of electrical characteristics in energy distribution systems
- Recording of load profiles in energy management systems (e.g. ISO 50001)
- Acquisition of the energy consumption for cost centre analysis
- Measured value transducer for building management systems or PLC (Modbus)
- Monitoring of power quality characteristics, e.g. harmonics up to 40th harmonic
- Residual current monitoring (RCM)

Main features

Universal meter

- Operating current monitoring for general electrical parameters
- High transparency through a multi-stage and scalable measurement system in the field of energy measurement
- Acquisition of events through continuous measurement with 200 ms high resolution

RCM device

- Continuous monitoring of residual currents (Residual Current Monitor, RCM)
- Alarming in case a preset threshold fault current reached
- Near-realtime reactions for triggering countermeasures
- Permanent RCM measurement for systems in permanent operation without the opportunity to switch off

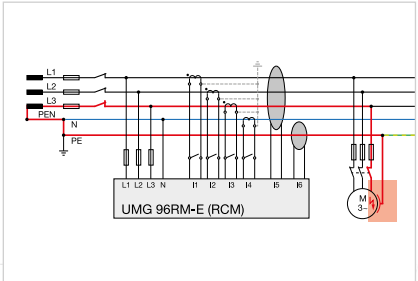

Fig.: UMG 96RM-E with residual current monitoring via measuring inputs I5 / I6

Energy measurement device

- Continuous acquisition of the energy data and load profiles
- Essential both in relation to energy efficiency and for the safe design of power distribution systems

Harmonics analyser / event recorder

- Analysis of individual harmonics for current and voltage
- Prevention of production downtimes
- Significantly longer service life for equipment
- Rapid identification and analysis of power quality fluctuations by means of user-friendly tools (GridVis®)

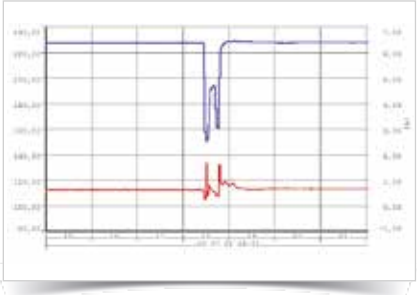

Fig.: Event logger: Voltage dip in the low voltage distribution system

Extensive selection of tariffs

- 7 tariffs each for effective energy (consumption, delivery and without backstop)
- 7 tariffs each for reactive energy (inductive, capacitive and without backstop)
- 7 tariffs for apparent energy
- L1, L2 and L3, for each phase

Highest possible degree of reliability

- Continuous leakage current measurement
- Historical data: Long-term monitoring of the residual current allows changes to be identified in good time, e.g. insulation faults
- Time characteristics: Recognition of time relationships
- Prevention of neutral conductor carryover
- RCM threshold values can be optimized for each individual case: Fixed, dynamic and stepped RCM threshold value
- Monitoring of the CGP (central ground point) and the sub-distribution panels

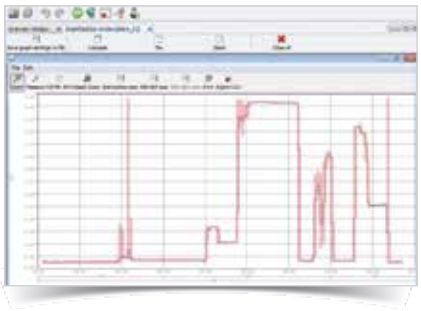

Fig.: Continuous leakage current measurement

Analysis of fault current events

- Event list with time stamp and values
- Presentation of fault currents with characteristic and duration
- Reproduction of phase currents during the fault current surge
- Presentation of the phase voltages during the fault current surge

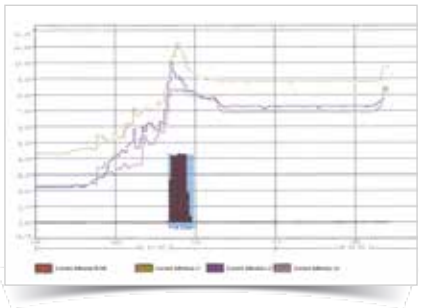

Fig.: Analysis of fault current events

Analysis of the harmonic fault current components

- Frequencies of the fault currents (fault type)
- Current peaks of the individual frequency components in A and %
- Harmonics analysis up to 40th harmonic
- Maximum values with real-time bar display

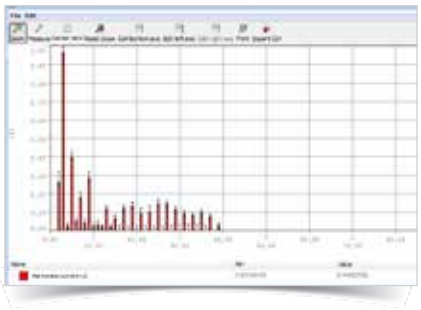

Fig.: Analysis of the harmonic fault current components

Digital IOs

- Extensive configuration of IOs for intelligent integration, alarm and control tasks

Ethernet (TCP/IP)- / Homepage- / Ethernet-Modbus gateway functionality

- Simple integration into the network
- More rapid and reliable data transfer
- Modern homepage
- World-wide access to measured values by means of standard web browsers via the device's inbuilt homepage
- Access to measurement data via various channels
- Reliable saving of measurement data possible over a very long periods of time in the 256 MByte measurement data memory
- Connection of Modbus slave devices via Ethernet-Modbus gateway

Fig.: Ethernet-Modbus gateway functionality

Measuring device homepage

- Webserver on the measuring device, i.e. device's own homepage
- Remote operation of the device display via the homepage
- Comprehensive measurement data incl. PQ
- Online data directly available via the homepage, historic data optional via the APP measured value monitor, 51.00.246

Fig.: Illustration of the online data via the device's inbuilt homepage

Dimension diagrams

All dimensions in mm

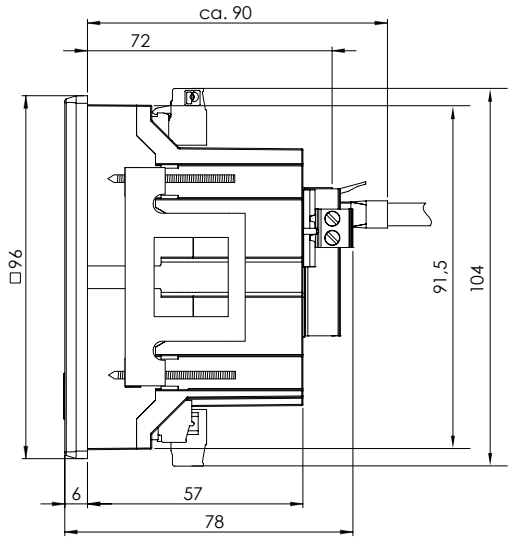

Side view

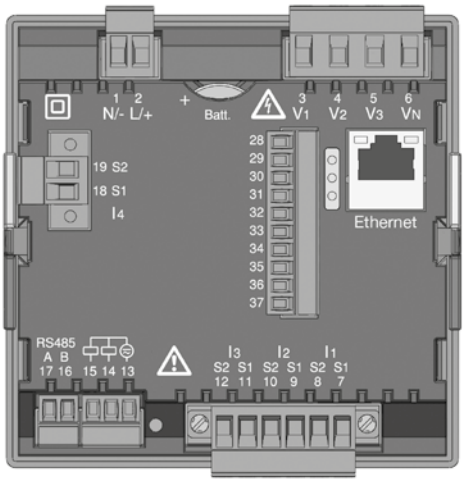

Rear view

Cut out: $92^{+0,8}$ x $92^{+0,8}$ mm

Typical connection

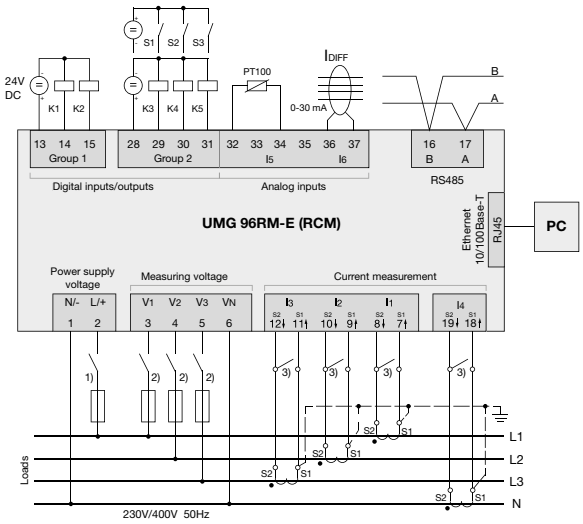

Fig.: Connection example with temperature and residual current measurement

Device overview and technical data

	UMG 96RM-E*1
Item number (90–277 V AC / 90–250 V DC)	**52.22.062**
Item number (24–90 V AC / 24–90 V DC)	**52.22.063**
BACnet communication	52.22.081
General	
Use in low and medium voltage networks	•
Accuracy voltage measurement	0.2 %
Accuracy current measurement	0.2 %
Accuracy active energy (kWh, .../5 A)	Class 0.5S
Number of measurement points per period	426
Uninterrupted measurement	•
RMS - momentary value	
Current, voltage, frequency	•
Active, reactive and apparent power / total and per phase	•
Power factor / total and per phase	•
Energy measurement	
Active, reactive and apparent energy [L1, L2, L3, ∑ L1–L3]	•
Number of tariffs	14
Recording of the mean values	
Voltage, current / actual and maximum	•
Active, reactive and apparent power / actual and maximum	•
Frequency / actual and maximum	•
Demand calculation mode (bi-metallic function) / thermal	•

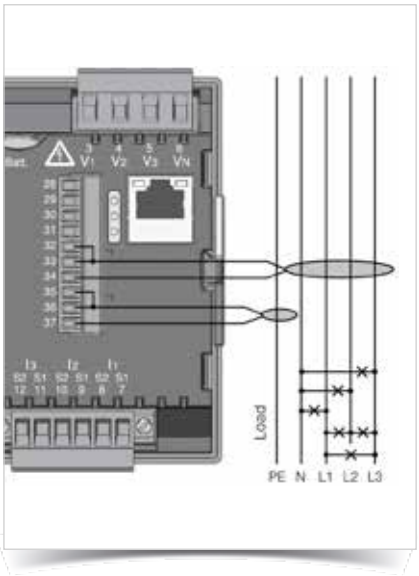

Fig.: Connection example residual current measurement and PE monitoring

Comment:
For detailed technical information please refer to the operation manual and the Modbus address list.

• = included - = not included

*1 Inclusive UL certification.

Other measurements	
Operating hours measurement	•
Clock	•
Power quality measurements	
Harmonics per order / current and voltage	1st – 40th
Distortion factor THD-U in %	•
Distortion factor THD-I in %	•
Rotary field indication	•
Current and voltage, positive, zero and negative sequence component	•
Error / event recorder function	•
Under and overvoltage recording	•
Measured data recording	
Memory (Flash)	256 MB
Average, minimum, maximum values	•
Current measurement channel	4 (+2)
Alarm messages	•
Time stamp	•
Time basis average value	freely user-defined
RMS averaging, arithmetic	•
Displays and inputs / outputs	
LCD display (with backlighting), 2 buttons	•
Digital outputs (as switch or pulse output)	2
Digital inputs and outputs (selectable)	3
Analogue inputs (RCM, temperature, analogue)	2
Voltage inputs	L1, L2, L3 + N
Password protection	•
Communication	
Interfaces	
RS485: 9.6 – 115.2 kbps (Screw-type terminal)	•
Ethernet 10/100 Base-TX (RJ-45 socket)	•
Protocols	
Modbus RTU	•
Modbus TCP/IP	•
Modbus RTU over Ethernet	•
Modbus Gateway for Master-Slave configuration	•
HTTP (homepage configurable)	•
SMTP (email)	•
NTP (time synchronisation)	•
TFTP	•
FTP (File-Transfer)	•
SNMP	•
DHCP	•
BACnet (optional)	•
ICMP (Ping)	•
Software GridVis®-Basic*2	
Online and historic graphs	•
Databases (Janitza DB, Derby DB); MySQL, MS SQL with higher GridVis® versions)	•
Manual reports (energy, power quality)	•
Topology views	•
Manual read-out of the measuring devices	•
Graph sets	•
Programming / threshold values / alarm management	
Comparator (5 Groups with 10 comparators each)	•
Comprehensive adjustment options for RCM	•

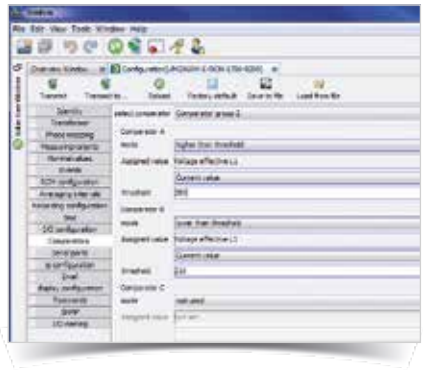

Fig.: GridVis® software, configuration menu

Comment:
For detailed technical information please refer to the operation manual and the Modbus address list.

• = included - = not included

*2 Optional additional functions with the packages GridVis®-Professional, GridVis®-Service and GridVis®-Ultimate.

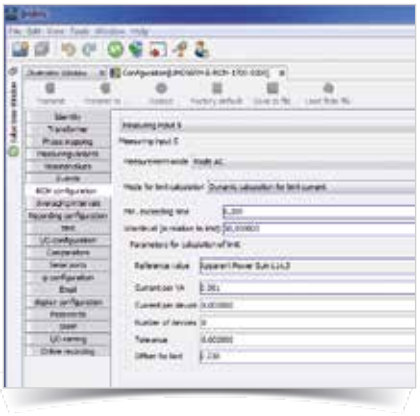

Fig.: RCM configuration, e.g. dynamic threshold value formation, for load-dependent threshold value adaptation

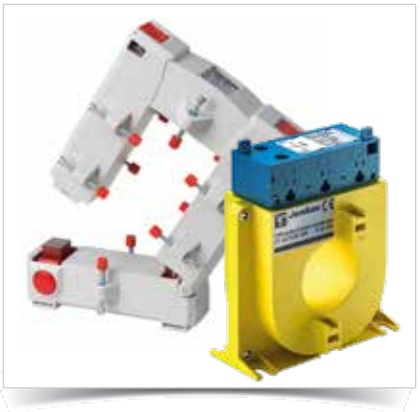

Fig.: Residual current transformer for the acquisition of residual currents. Wide range with different configurations and sizes allow use in almost all applications

Technical data	
Type of measurement	Constant true RMS Up to 40th harmonic
Nominal voltage, three-phase, 4-conductor (L-N, L-L)	277 / 480 V AC
Nominal voltage, three-phase, 3-conductor (L-L)	480 V AC
Measurement in quadrants	4
Networks	TN, TT, IT
Measured voltage input	
Overvoltage category	300 V CAT III
Measurement range, voltage L-N, AC (without potential transformer)	0*5 ... 300 Vrms
Measurement range, voltage L-L, AC (without potential transformer)	0*5 ... 520 Vrms
Resolution	0.01 V
Impedance	3 MOhm / phase
Frequency measuring range	45 ... 65 Hz
Power consumption	approx. 0.1 VA
Sampling frequency per channel (50 / 60 Hz)	21.33 / 25.6 kHz
Measured current input	
Rated current	1 / 5 A
Resolution	0.1 mA
Measurement range	0.005 ... 6 Amps
Overvoltage category	300 V CAT II
Measurement surge voltage	2 kV
Power consumption	approx. 0.2 VA (Ri = 5 mOhm)
Overload for 1 sec.	120 A (sinusoidal)
Sampling frequency per channel (50 / 60 Hz)	21.33 / 25.6 kHz
Residual current input	
Analogue inputs	2 (for residual current or temperature measurement)
Measurement range, residual current input*3	0.05 ... 30 mA
Digital outputs	
Switching voltage	max. 60 V DC, 33 V AC
Switching current	max. 50 mA Eff AC / DC
Response time	10 / 12 periods + 10 ms
Pulse output (energy pulse)	max. 50 Hz
Maximum cable length	up to 30 m unscreened, from 30 m screened
Mechanical properties	
Weight	approx. 370 g
Device dimensions in mm (H x W x D)*4	96 x 96 x 78
Battery	CR2032, 3 V,type Lithium
Protection class per EN 60529	Front: IP40; Front with seal: IP54; Back: IP20
Assembly per IEC EN 60999-1 / DIN EN 50022	Front panel installation
Cable cross section	
Supply voltage	0.2 to 2.5 mm²
Current measurement	0.2 to 2.5 mm²
Voltage measurement	0.08 to 4.0 mm²
Environmental conditions	
Temperature range	Operation: K55 (-10 ... +70 °C)
Relative humidity	Operation: 0 to 75 % RH
Operating height	0 ... 2,000 m above sea level
Degree of pollution	2
Installation position	user-defined
Electromagnetic compatibility	
Electromagnetic compatibility of electrical equipment	Directive 2004/108/EC
Electrical appliances for application within particular voltage limits	Directive 2006/95/EC

Comment:
For detailed technical information please refer to the operation manual and the Modbus address list.

• = included - = not included

*3 Example of residual current input 30 mA with 600/1 residual current transformer: 600 x 30 mA = 18,000 mA

*4 Accurate device dimensions can be found in the operation manual.

*5 The UMG 96RM-E can only detect measurements when a voltage L1-N greater than 20V eff (4-wire measurement) at voltage input V1 or a voltage L1-L2 greater than 34V eff (3-wire measurement) is applied.

Equipment safety	
Safety requirements for electrical equipment for measurement, regulation, control and laboratory use – Part 1: General requirements	IEC/EN 61010-1
Part 2-030: Particular requirements for testing and measuring circuits	IEC/EN 61010-2-030
Noise immunity	
Class A: Industrial environment	IEC/EN 61326-1
Electrostatic discharge	IEC/EN 61000-4-2
Voltage dips	IEC/EN 61000-4-11
Emissions	
Class B: Residential environment	IEC/EN 61326-1
Radio disturbanc voltage strength 30 – 1000 MHz	IEC/CISPR11/EN 55011
Radiated interference voltage 0.15 – 30 MHz	IEC/CISPR11/EN 55011
Safety	
Europe	CE labelling
Firmware	
Firmware update	Update via GridVis® software. Firmware download (free of charge) from the website: http://www.janitza.com

Comment:
For detailed technical information please refer to the operation manual and the Modbus address list.

• = included - = not included

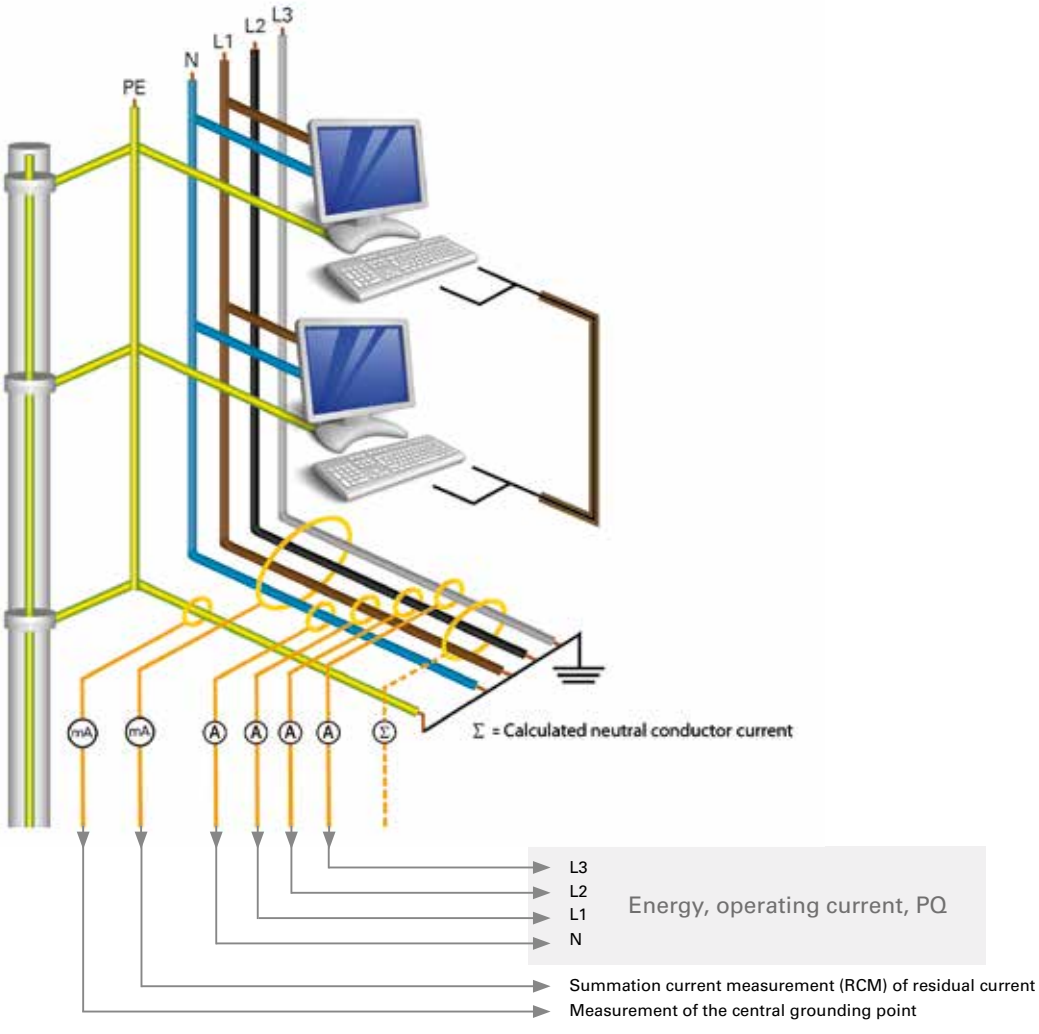

UMG 96-PA

4-in-1 energy measurement device – four functions one solution

Power quality

Harmonics

Modbus interface

Colour graphical display

GridVis®
Analysis software

Accuracy
of measurement 0.5

Interface
- RS485

Communication
- Protocols: Modbus RTU / Slave

Accuracy of measurement
- Energy: Class 0.5 S (... / 5 A)
- Current: 0.2 %
- Voltage: 0.2 %

MID measurement COMING SOON
- Tamper-proof and legally secure

Power quality
- Harmonics up to 25th harmonic, odd
- Distortion factor THD-U
- Distortion factor THD-I

Measured data memory
- 4 MB

Intuitive user guidance
- Colour graphics display with user-friendly menu guidance

Networks
- TN, TT networks with voltage swell category 600 V CAT III

Each 3 digital inputs and outputs

1 analog output

Network visualisation software
- Free GridVis® Basic

Areas of application

- Measurement, monitoring and checking of electrical characteristics in energy distribution systems
- Recording of load profiles in energy management systems (e.g. ISO 50001)
- Acquisition of the energy consumption for cost centre analysis
- Measured value transducer for building management systems or PLC (Modbus)
- As MID variant, suitable for accounting applications
- Optional module-based extension for residual and leakage current measurement
- Near-realtime reactions for triggering countermeasures
- Permanent RCM measurement for systems in permanent operation without the opportunity to switch off

Main features

Power quality

- Harmonics analysis up to 25th harmonic, indirect
- Distortion factor THD-U / THD-I
- Minimum and maximum values
- Measurement of positive, negative and zero sequence component

Features

- 3 Voltage measurement inputs (600 V CATIII)
- 3 Current measurement inputs
- Continuous sampling of the voltage and current measurement inputs
- Measurement of the reactive distortion power
- Sampling rate 8.33 kHz
- Transfer of the measured values via a serial interface

Fig.: UMG 96-PA energy measurement device

Extension of functions by add-on modules

- 2 analogue inputs – can be selected as 0–20 mA analogue inputs or as RCM measuring inputs with detection of cable breaks and additional temperature measurement
- Module – selectable with Ethernet interface
- Continuous monitoring of residual currents (Residual Current Monitoring, RCM)

Fig.:UMG 96-PA incl. module with Ethernet connection

Digital IOs

- Additional application options with comprehensive peripherals (three digital inputs and outputs and an analogue output)
- Extensive configuration of IOs for intelligent integration for monitoring of limit values and message upon exceedance

User-friendly, colour graphical display with intuitive user guidance

- High resolution colour graphical display 320 x 240 pixels, 6 buttons
- User-friendly, self-explanatory and intuitive operation
- Illustration of measured values in numeric form, as a bar graph or line graph

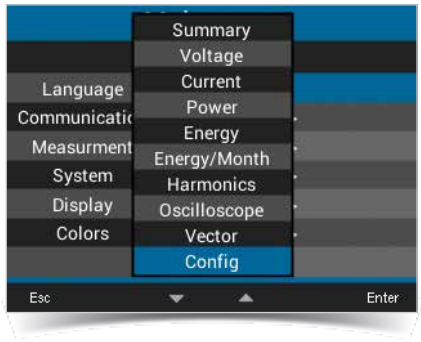

Fig.: UMG 96-PA colour graphics display

MID-compliant measurement

- Certified and tamp-proof measurement
- Legally secure accounting & energy acquisition (EEG [German renewable energy sources] law, StromStG [German electricity tax law])
- Fulfilment of legal stipulations

Typical connection variant

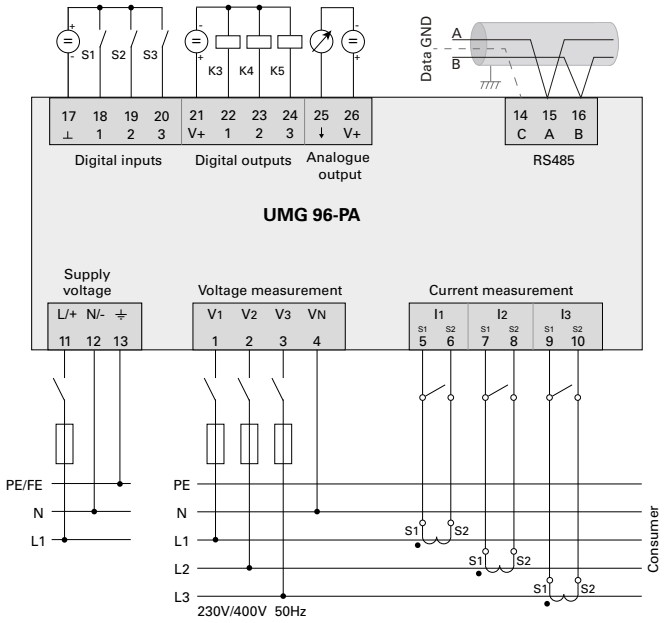

Device overview and technical data, basic device

Basic device without MID*1	UMG 96-PA
Item number (90–277 V AC / 90–250 V DC)	**52.32.001**
Item number (24–90 V AC / 24–90 V DC)	**52.32.002**
Measured voltage (L-N/L-L)	417 / 720 V AC
Supply voltage (from 3-phase network)	-
General	
Use in low and medium voltage networks	•
Accuracy of measurement with voltage	0.2 %
Accuracy of measurement with current	0.2 %
Accuracy of measurement with active energy (kWh, .../5 A)	Class 0.5S
Number of measurement points per period	166
Uninterrupted measurement	•
RMS - momentary value	
Current, voltage, frequency	•
Active, reactive and apparent power / total and per phase	•
Power factor / total and per phase	•
Energy measurement	
Active, reactive and apparent energy [L1,L2,L3, ∑ L1-L3]	•
Number of tariffs	HT / LT
Recording of the mean values	
Voltage, current / present and maximum	•
Active, reactive and apparent power / present and maximum	•
Frequency / present and maximum	•

Comment:
For detailed technical information, please refer to the operation manual and the Modbus address list.

• = included - = not included
*1 MID certification applied for

	UMG 96-PA
Measurement of the power quality	
Harmonics per order / current	1. – 25th.
Harmonic per order / voltage	1. – 25th.
Distortion factor THD-U in %	•
Distortion factor THD-I in %	•
Current and voltage, positive, zero and negative sequence component	•
Measured data recording	
Current measurement channels	3
Recording period	Up to 144 days
Memory (Flash)	4 MB
Battery	CR2032
Clock	•
Mean, minimum, maximum values	•
Communication	
Interfaces	
RS485: Autobaud, 9.6 – 115.22 kbps (Screw-type terminal)	•
Protocols	
Modbus RTU	•
Software GridVis® Basic*1	
Online graphs	•
Databases (Janitza DB, Derby DB)	•
Manual reports (energy, power quality)	•
Topology views	•
Manual read-out of the measuring devices	•
Graph sets	•
Programming / threshold values / alarm management	
Technical data	
Comparator (2 Groups with 3 comparators each)	•
Type of measurement	Continuous real effective value measurement up to the 25th harmonic
Nominal voltage, three-phase, 4-conductor (L-N, L-L)	417 / 720 V AC (+ 10%)
Measurement in quadrants	4
Networks	TN, TT
Measured voltage input	
Overvoltage category	600 V CAT III
Maximum metering range, voltage L-N, AC (without transformer)	0*2 - 600 Vrms
Maximum metering range, voltage L-L, AC (without transformer)	0*2 - 1040 Vrms
Resolution	0.01 V
Frequency measuring range	45 to 65 Hz
Power consumption	4.5 VA
Measurement voltage surge	6 kV
Sampling rate	8.33 kHz / phase
Measured current input	
Rated current	1 / 5 A
Resolution	0.1 mA
Metering range	0.005 - 6 Amps
Overvoltage category	300 V CAT II
Measurement voltage surge	2 kV
Power consumption	Approx. 0.2 VA (Ri = 5 mOhm)
Overload for 1 sec.	60 A (sinusoidal)
Sampling rate	8.33 kHz / phase
Inpunts and outputs	
Digital inputs	3
Digital outputs	3
Analog outputs	1
Mechanical properties	
Weight	250 g
Device dimensions in mm (H x W x D)	Approx. 96 x 96 x 86
Protection class per EN 60529	Front IP40 / back IP20
Assembly per IEC EN 60999-1 / DIN EN 50022	Front panel installation
Connecting phase (U), Single core, multi-core, fine-stranded Terminal pins, core end sheath	 0.08 to 4.0 mm² 0.2 to 2.5 mm²
Connecting phase (I), Single core, multi-core, fine-stranded Terminal pins, core end sheath	 0.2 to 2.5 mm² 0.2 to 2.5 mm²

*2 The device can only determine measurement values if there is at the voltage measurement input V1 a voltage L1-N greater than 20 Veff (4-wire measurement) or a voltage L1-L2 greater than 34 Veff (3-wire measurement).

Environmental conditions	
Temperature range	Operation: K55 (-10 ... +55 °C)
Relative humidity	Operation: 0 to 75 %
Operating altitude	0 to 2,000 m above sea level
Pollution degree	2
Installation position	any
Electromagnetic compatibility	
Electromagnetic compatibility of equipment	Directive 2004/108/EC
Electrical equipment for use within certain voltage limits	Directive 2006/95/EC
Equipment safety	
Safety requirements for electrical equipment for measurement, control, and laboratory use – Part 1: General requirements	IEC/EN 61010-1
Part 2-030: Particular requirements for testing and measuring circuits	IEC/EN 61010-2-030
Immunity from interference	
Industrial area	IEC/EN 61326-1
Electrostatic discharge	IEC/EN 61000-4-2
Voltage dips	IEC/EN 61000-4-11
Emissions	
Class A: Residential area	IEC/EN 61326-1
RFI Field Strength 30 – 1,000 MHz	IEC/CISPR11/EN 55011
Radiated interference voltage 0.15 – 30 MHz	IEC/CISPR11/EN 55011
Safety	
Europe	CE labelling
USA and Canada	UL certified
Firmware	
Firmware update	Update via GridVis® software. Firmware download (free of charge) from the website: http://www.janitza.de

*[1] Optional additional functions with the packages GridVis®-Professional, GridVis®-Service and GridVis®-Ultimate.

Comment: For detailed technical information please refer to the operation manual and the Modbus address list.

• = included - = not included

Dimension diagrams

All dimensions in mm

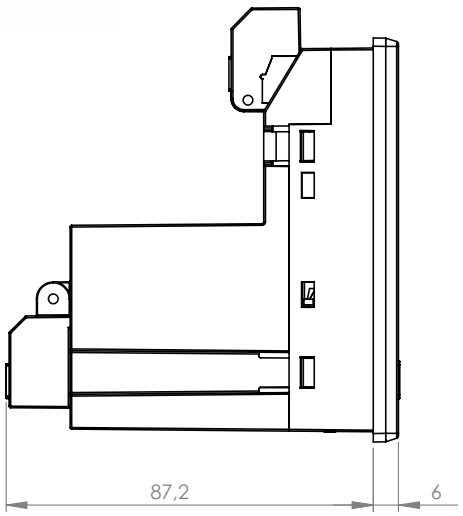

Side view

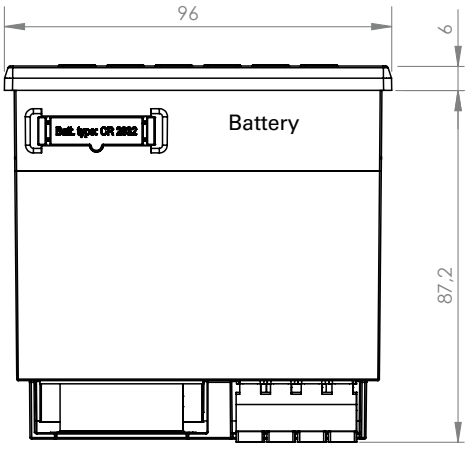

View from below

Cut-out size: $92^{+0,8}$ x $92^{+0,8}$ mm

Fig.:UMG 96-PA basic device without module

Fourth current transformer input
(e.g. N-phase)

Ethernet connection

COMING SOON

Fig.:UMG 96-PA with Ethernet connection

Device overview and technical data module

Modules for the UMG 96-PA	
Module without Ethernet connection	**Available soon**
Module with Ethernet connection	**Available soon**
Residual current input	
Analogue inputs	2 for residual current or analogue measurement
Rated current	30 mA rms
Triggering current	50 µA
Resolution	1 µA
Temperature measurement	**1x**
Update time	1 second
Connectable sensors	PT100, PT1000, KTY83, KTY84
Current measurement N measuring (I4)	
Rated current	1 / 5 A
Overvoltage category	300 V CAT II
Power consumption	Approx. 0.2 VA (Ri = 5 mOhm)
Sampling rate	8.33 kHz
Interface	
Ethernet connection	RJ45, 10/100 Mbit

Typical connection variant

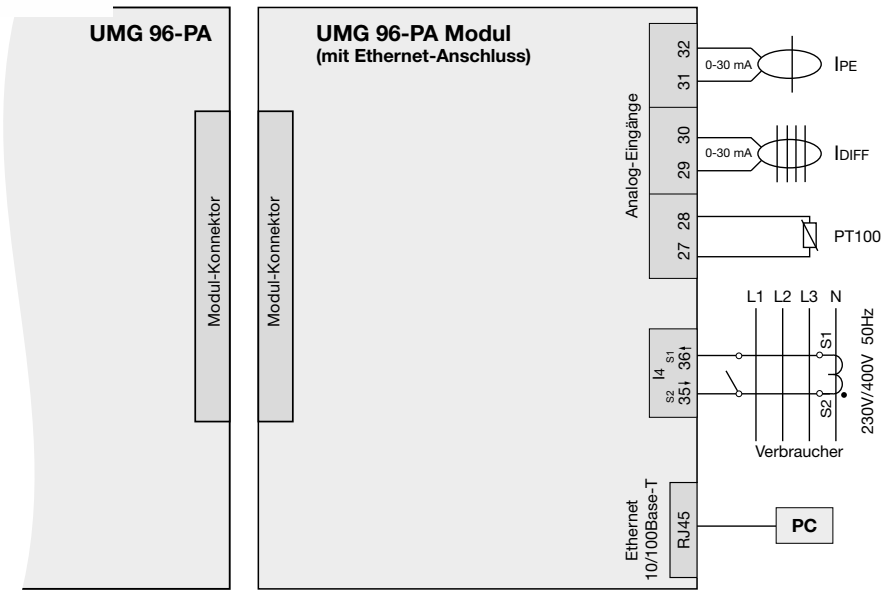

UMG 508

Multifunction power analyser

Power quality

Ethernet connection

Graphic programming

Colour graphical display

Ethernet-Modbus gateway

Alarm management

Communication
- Profibus (DP/V0)
- Modbus (RTU, TCP, Gateway)
- TCP/IP
- BACnet (optional)
- HTTP (Homepage)
- FTP (File transfer)
- SNMP
- TFTP
- NTP (time synchronisation)
- SMTP (email function)
- DHCP

Interfaces
- Ethernet
- Profibus / RS485 (DSUB-9)

Accuracy of measurement
- Energy: Class 0.2S (… / 5 A)
- Current: 0.2 %
- Voltage: 0.1 %

Power quality
- Harmonics up to 40th harmonic
- Short-term interruptions (> 20 ms)
- Transient recorder (> 50 µs)
- Starting currents (> 20 ms)
- Unbalance
- Full wave effective value recording (up to 4.5 min.)

Networks
- IT, TN, TT networks
- 3 and 4-phase networks
- Up to 4 single-phase networks

Measured data memory
- 256 MByte Flash
- 32 MB SDRAM

PLC functionality
- Graphical programming
- Jasic® programming language
- Programming of threshold values etc.

8 digital inputs
- Pulse input
- Logic input
- State monitoring
- HT / LT switching

5 digital outputs
- Pulse output kWh / kvarh
- Switch output
- Threshold value output
- Logic output

Peak demand management (optional)
- Up to 64 switch-off stages

Network visualisation software
- Free GridVis®-Basic

Areas of application

- Continuous monitoring of the power quality
- Energy management systems (ISO 50001)
- Master device with Ethernet gateway for subordinate measurement points
- Visualisation of the energy supply in the LVDB
- Analysis of electrical disturbances in the event of power quality problems
- Cost centre analysis
- Remote monitoring in the property operation
- Use in test fields (e.g. in universities)

Main features

High quality measurement with high sampling rate (20 kHz per channel)

Power quality

- Harmonics analysis up to 40th harmonic
- Acquisition of short-term interruptions
- Acquisition of transients
- Display of waveforms (current and voltage)
- Unbalance
- Vector diagram

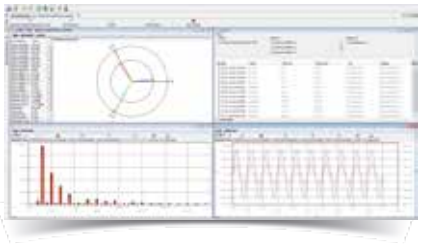

Fig.: GridVis® – Graph set

User-friendly, colour graphical display with intuitive user guidance

- High resolution graphics display
- User-friendly, self-explanatory and intuitive operation
- Clear and informative representation of online graphs and further power quality events

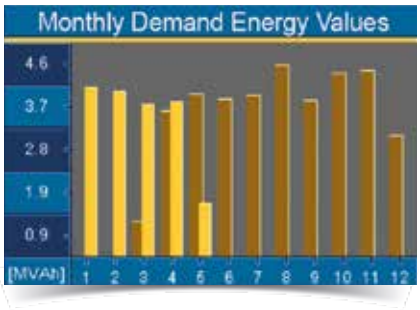

Fig.: Large colour display, e.g. 12 monthly demand values

Modern communications architecture via Ethernet

- Ethernet interface and web server
- Faster, better cost-optimised and more reliable communication system
- High flexibility due to the use of open standards
- Integration in PLC systems and BMS through additional interfaces
- BACnet optionally available

Modbus Gateway function

- Economical connection of devices without Ethernet interface
- Integration of devices with Modbus-RTU interface possible
- Data can be scaled and described
- Minimised number of IP addresses required

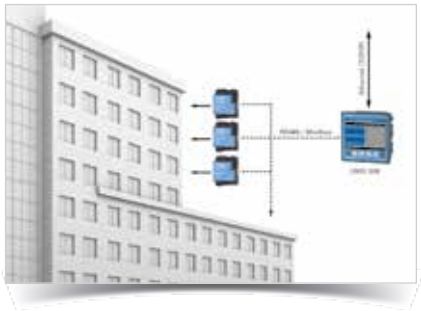

Fig.: GridVis® topology view

Graphical programming

- Comprehensive programming options (PLC functionality)
- Jasic® source code programming
- Sustainable functional expansions far beyond pure measurement
- Complete APPs from the Janitza library

Powerful alarm management

- Can be programmed via the graphic programming or Jasic® source code
- All measured values can be used
- Can be arbitrarily, mathematically processed
- Individual forwarding via email sending, switching of digital outputs, writing to Modbus addresses etc.
- Watchdog APP
- Further alarm management functions via GridVis®-Service alarm management

Fig.: The alarm management system reports events arising in good time.

Dimension diagrams

All dimensions in mm

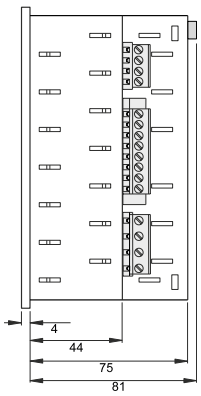

Side view

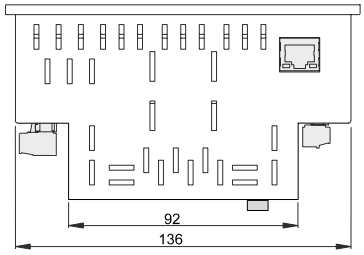

View from below

Ethernet connection

Cut out: 138$^{+0,8}$ x 138$^{+0,8}$ mm

Typical connection

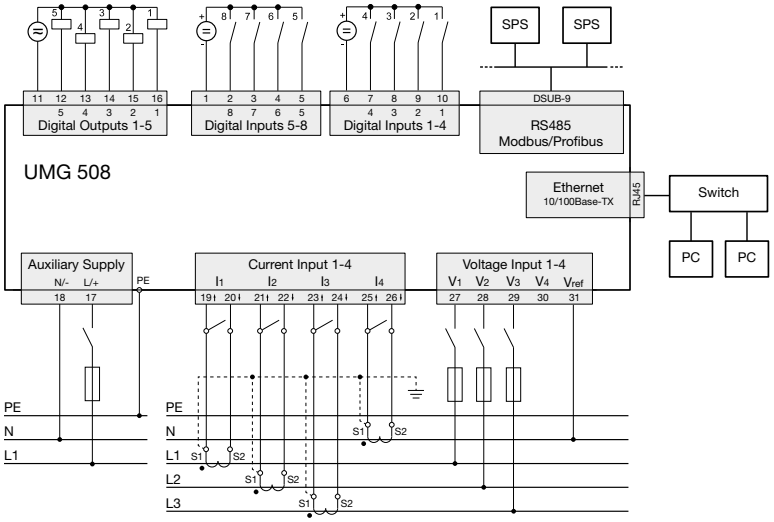

Device overview and technical data

	UMG 508	
Item number	**52.21.001**	**52.21.002**
Supply voltage AC	95 ... 240 V AC	44 ... 130 V AC
Supply voltage DC	80 ... 340 V DC	48 ... 180 V DC
Item number (UL)	**52.21.011**	**52.21.012**
Supply voltage AC	95 ... 240 V AC	44 ... 130 V AC
Supply voltage DC	80 ... 280 V DC	48 ... 180 V DC
Device options		
Emax function (peak demand management)	**52.21.080**	**52.21.080**
BACnet communication	**52.21.081**	**52.21.081**

General	
Use in low, medium and high voltage networks	•
Accuracy voltage measurement	0.1 %
Accuracy current measurement	0.2 %
Accuracy active energy (kWh, .../5 A)	Class 0.2S
Number of measurement points per period	400
Uninterrupted measurement	•
RMS - momentary value	
Current, voltage, frequency	•
Active, reactive and apparent power / total and per phase	•
Power factor / total and per phase	•
Energy measurement	
Active, reactive and apparent energy [L1, L2, L3, L4, ∑ L1–L3, ∑ L1–4]	•
Number of tariffs	8
Recording of the mean values	
Voltage, current / actual and maximum	•
Active, reactive and apparent power / actual and maximum	•
Frequency / actual and maximum	•
Demand calculation mode (bi-metallic function) / thermal	•
Other measurements	
Operating hours measurement	•
Clock	•
Weekly timer	Jasic®
Power quality measurements	
Harmonics per order / current and voltage	1st – 40th
Harmonics per order / active and reactive power	1st – 40th

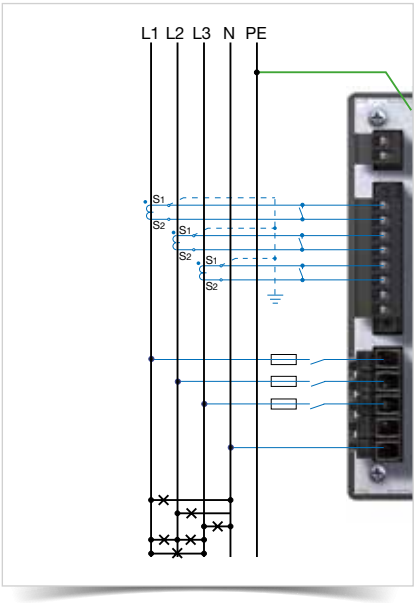

Fig.: Current and voltage measurement

Comment:
For detailed technical information please refer to the operation manual and the Modbus address list

• = included - = not included

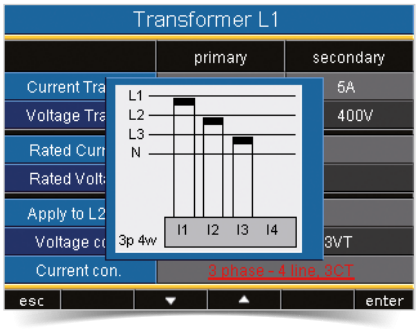

Fig.: Example for the configuration of current measurement via 3 current transformers in a three-phase 4-wire network on the UMG 508 display

Fig.: Illustration of the full wave effective values for an event

Comment:
For detailed technical information please refer to the operation manual and the Modbus address list.

• = included - = not included

*1 Optional additional functions with the packages GridVis®-Professional, GridVis®-Service and GridVis®-Ultimate.

*2 With UL variants: 347/600 V

*3 The UMG 508 can only detect measurement values if a voltage L-N larger than 10 Veff or a voltage L-L larger than 18 Veff is applied to at least one voltage measurement input.

Distortion factor THD-U in %	•
Distortion factor THD-I in %	•
Voltage unbalance	•
Rotary field indication	•
Current and voltage, positive, zero and negative sequence component	•
Transients	> 50 µs
Error / event recorder function	•
Short-term interruptions	20 ms
Oscillogram recording (waveform U and I)	•
Full wave effective values (U, I, P, Q)	•
Under and overvoltage recording	•
Measured data recording	
Memory (Flash)	256 MB
Average, minimum, maximum values	•
Measured data channels	8
Alarm messages	•
Time stamp	•
Time basis average value	freely user-defined
RMS averaging, arithmetic	•
Displays and inputs / outputs	
LCD colour graphical display 320 x 240, 256 colours, 6 buttons	•
Language selection	•
Digital inputs	8
Digital outputs (as switch or pulse output)	5
Voltage and current inputs	each 4
Password protection	•
Peak load management (optionally 64 channels)	•
Communication	
Interfaces	
RS485: 9.6 – 921.6 kbps (DSUB-9 connector)	•
Profibus DP: Up to 12 Mbps (DSUB-9-plug)	•
Ethernet 10/100 Base-TX (RJ-45 socket)	•
Protocols	
Modbus RTU, Modbus TCP, Modbus RTU over Ethernet	•
Modbus Gateway for Master-Slave configuration	•
Profibus DP V0	•
HTTP (homepage configurable)	•
SMTP (email)	•
NTP (time synchronisation)	•
TFTP	•
FTP (File-Transfer)	•
SNMP	•
DHCP	•
TCP/IP	•
BACnet (optional)	•
ICMP (Ping)	•
Software GridVis®-Basic*1	
Online and historic graphs	•
Databases (Janitza DB, Derby DB); MySQL, MS SQL with higher GridVis® versions)	•
Manual reports (energy, power quality)	•
Graphical programming	•
Topology views	•
Manual read-out of the measuring devices	•
Graph sets	•
Programming / threshold values / alarm management	
Application programs freely programmable	7
Graphical programming	•
Programming via source code Jasic®	•

Technical data	
Type of measurement	Constant true RMS Up to 40th harmonic
Nominal voltage, three-phase, 4-conductor (L-N, L-L)	417 / 720 V AC *2
Nominal voltage, three-phase, 3-conductor (L-L)	600 V AC
Measurement in quadrants	4
Networks	TN, TT, IT
Measurement in single-phase/multi-phase networks	1 ph, 2 ph, 3 ph, 4 ph and up to 4 times 1 ph
Measured voltage input	
Overvoltage category	600 V CAT III
Measured range, voltage L-N, AC (without potential transformer)	0*3 ... 600 Vrms

Measured range, voltage L-L, AC (without potential transformer)	0*[3] ... 1000 Vrms
Resolution	0.01 V
Impedance	4 MOhm / phase
Frequency measuring range	40 ... 70 Hz
Power consumption	approx. 0.1 VA
Sampling frequency	20 kHz / phase
Measured current input	
Rated current	1 / 5 A
Resolution	0.1 mA
Measurement range	0.005 ... 8.5 Amps
Overvoltage category	300 V CAT III
Measurement surge voltage	4 kV
Power consumption	approx. 0.2 VA (Ri = 5 MOhm)
Overload for 1 sec.	120 A (sinusoidal)
Sampling frequency	20 kHz
Digital inputs and outputs	
Number of digital inputs	8
Maximum counting frequency	20 Hz
Reaction time (Jasic® program)	200 ms
Input signal present	18 ... 28 V DC (typical 4 mA)
Input signal not present	0 ... 5 V DC, current < 0.5 mA
Number of digital outputs	5
Switching voltage	max. 60 V DC, 30 V AC
Switching current	max. 50 mA Eff AC / DC
Output of voltage dips	20 ms
Pulse output (energy pulse)	max. 20 Hz
Maximum cable length	up to 30 m unscreened, from 30 m screened
Mechanical properties	
Weight	1080 g
Device dimensions in mm (H x W x D)	144 x 144 x approx. 81
Battery	Type CR1/2AA, 3 V, Li-Mn
Protection class per EN 60529	Front: IP40; Rear: IP20
Assembly per IEC EN 60999-1 / DIN EN 50022	Front panel installation
Connecting phase (U / I), Single core, multi-core, fine-stranded Terminal pins, core end sheath	 0.2 to 2.5 mm² 0.2 to 2.5 mm²
Environmental conditions	
Temperature range	Operation: K55 (-10 ... +55 °C)
Relative humidity	Operation: 0 ... 75 % RH
Operating height	0 ... 2,000 m above sea level
Degree of pollution	2
Installation position	user-defined
Electromagnetic compatibility	
Electromagnetic compatibility of electrical equipment	Directive 2004/108/EC
Electrical appliances for application within particular voltage limits	Directive 2006/95/EC
Equipment safety	
Safety requirements for electrical equipment for measurement, regulation, control and laboratory use – Part 1: General requirements	IEC/EN 61010-1
Part 2-030: Particular requirements for testing and measuring circuits	IEC/EN 61010-2-030
Noise immunity	
Class A: Industrial environment	IEC/EN 61326-1, EMV-ILA Version 01-03
Electrostatic discharge	IEC/EN 61000-4-2
Voltage dips	IEC/EN 61000-4-11, EMV-ILA V01-03
Emissions	
Class B: Residential environment	IEC/EN 61326-1, EMV-ILA Version 01-03
Radio disturbanc voltage strength 30 – 1000 MHz	IEC/CISPR11/EN 55011
Radiated interference voltage 0.15 – 30 MHz	IEC/CISPR11/EN 55011
Radiated interference voltage 9 – 150 kHz	EMV-ILA V01-03
Safety	
Europe	CE labelling
USA and Canada	UL variants available
Firmware	
Firmware update	Update via GridVis® software. Firmware download (free of charge) from the website: http://www.janitza.com

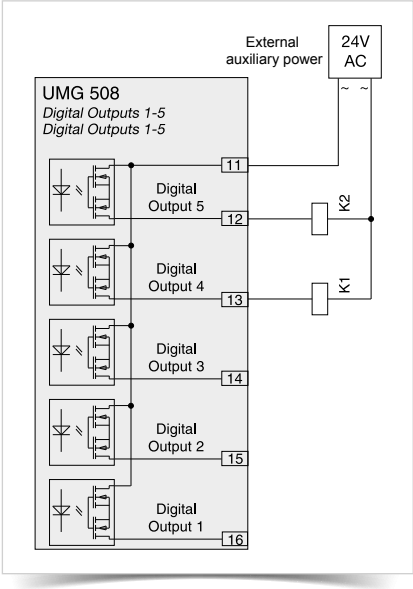

Fig.: Connection of two electronic relays to digital outputs 4 and 5

Comment:
For detailed technical information please refer to the operation manual and the Modbus address list.

• = included - = not included

*[3] The UMG 508 can only detect measurement values if a voltage L-N larger than 10 Veff or a voltage L-L larger than 18 Veff is applied to at least one voltage measurement input.

UMG 509-PRO

Multifunction power analyser with RCM

Power quality

Ethernet connection

Graphic programming

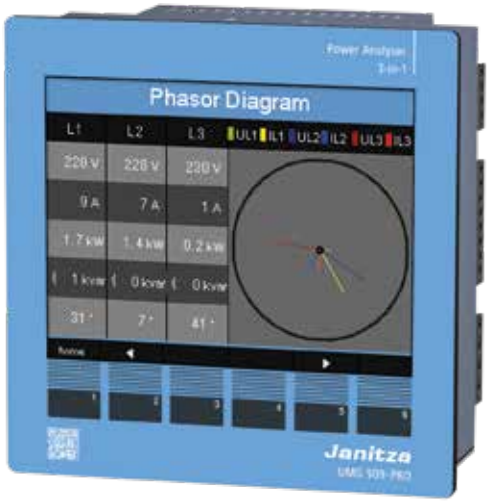

Residual current monitoring

Ethernet-Modbus gateway

Alarm management

Communication
- Profibus (DP/V0)
- Modbus (RTU, TCP, Gateway)
- TCP/IP
- BACnet (optional)
- HTTP (Homepage)
- FTP (File transfer)
- SNMP
- TFTP
- NTP (time synchronisation)
- SMTP (email function)
- DHCP

Interfaces
- Ethernet
- Profibus (DSUB-9)
- RS485 Modbus (terminal strip)

Accuracy of measurement
- Energy: Class 0.2S (... / 5 A)
- Current: 0.2 %
- Voltage: 0.1 %

Power quality
- Harmonics up to 63th harmonic
- Short-term interruptions (> 20 ms)
- Transient recorder (> 50 µs)
- Starting currents (> 20 ms)
- Unbalance

Networks
- IT, TN, TT networks
- 3 and 4-phase networks
- Up to 4 single-phase networks

Measured data memory
- 256 MByte Flash
- 32 MB SDRAM

PLC functionality
- Graphical programming
- Jasic® programming language
- Programming of threshold values etc.

2 digital inputs
- Pulse input
- Logic input
- State monitoring
- HT / LT switching

2 digital outputs
- Pulse output kWh / kvarh
- Switch output
- Threshold value output
- Logic output

Network visualisation software
- Free GridVis®-Basic

Thermistor input
- PT100, PT1000, KTY83, KTY84

RCM – Residual Current Monitoring
- 2 residual current inputs

Areas of application

- Continuous monitoring of the power quality
- Energy management systems (ISO 50001)
- Master device with Ethernet gateway for subordinate measurement points
- Visualisation of the energy supply in the LVDB
- Analysis of electrical disturbances in the event of power quality problems
- Cost centre analysis
- Remote monitoring in the property operation
- Use in test fields (e.g. in universities)

Main features

High quality measurement with high sampling rate (20 kHz per channel)

Power quality

- Harmonics analysis up to 63rd harmonic
- Acquisition of short-term interruptions
- Acquisition of transients
- Display of waveforms (current and voltage)
- Unbalance
- Vector diagram

RCM (Residual Current Monitoring)

- Continuous monitoring of residual currents (Residual Current Monitor, RCM)
- Alarming in case a preset threshold fault current reached
- Near-realtime reactions for triggering countermeasures
- Permanent RCM measurement for systems in permanent operation without the opportunity to switch off
- Ideal for the central earthing point in TN-S systems

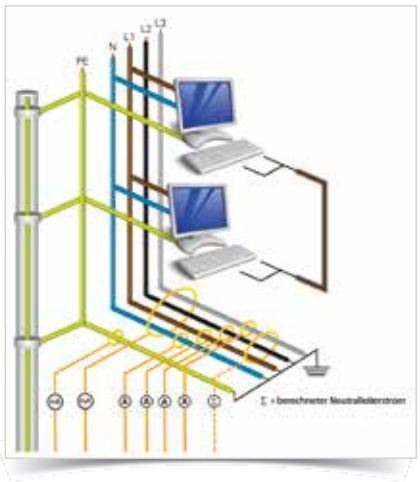

Fig.: Example RCM measurement

Modern communications architecture via Ethernet

- Ethernet interface and web server
- Faster, better cost-optimised and more reliable communication system
- High flexibility due to the use of open standards
- Integration in PLC systems and BMS through additional interfaces
- BACnet optionally available
- Up to 4 ports simultaneous
- Versatile IP protocols

Modbus Gateway function

- Economical connection of devices without Ethernet interface
- Integration of devices with Modbus-RTU interface possible
- Data can be scaled and described
- Minimised number of IP addresses required

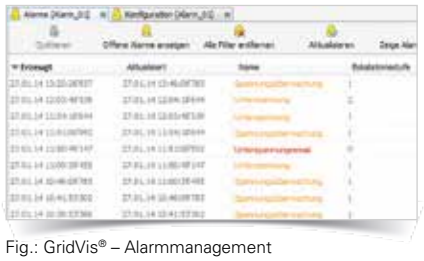

Fig.: GridVis® – Alarmmanagement

Graphical programming

- Comprehensive programming options (PLC functionality)
- Jasic® source code programming
- Sustainable functional expansions far beyond pure measurement
- Complete APPs from the Janitza library

Powerful alarm management

- Can be programmed via the graphic programming or Jasic® source code
- All measured values can be used
- Can be arbitrarily, mathematically processed
- Individual forwarding via email sending, switching of digital outputs, writing to Modbus addresses etc.
- Watchdog APPs
- Further alarm management functions via GridVis®-Service alarm management

Dimension diagrams

All dimensions in mm

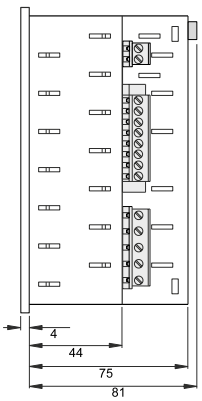

Side view

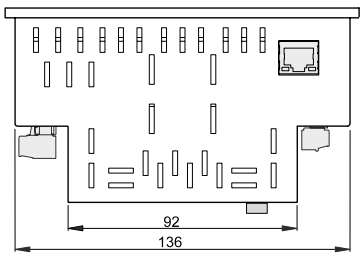

View from below

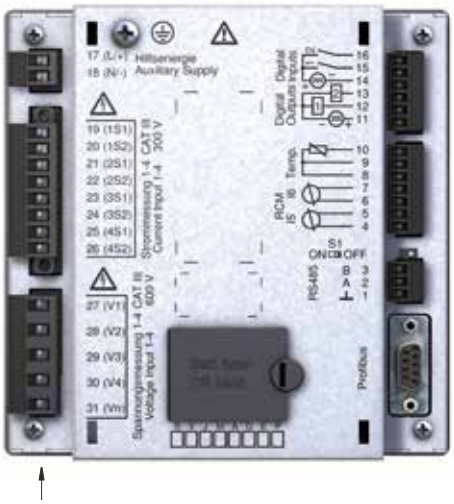

Ethernet connection

Cut out: 138$^{+0.8}$ x 138$^{+0.8}$ mm

Typical connection

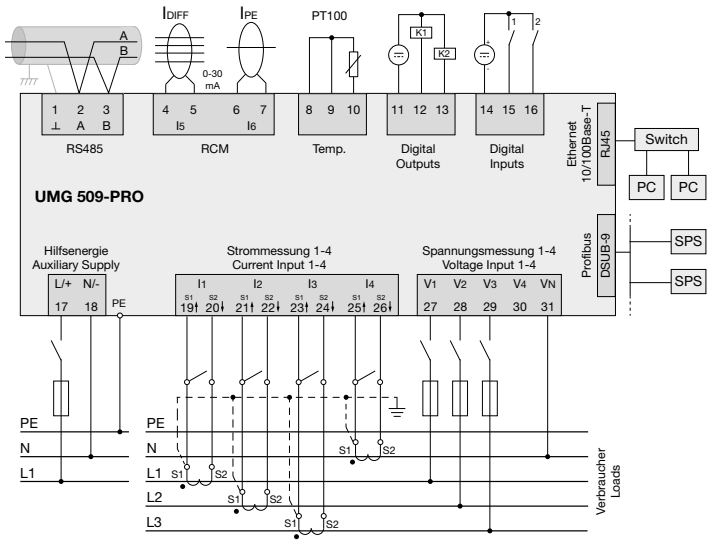

Device overview and technical data

	UMG 509-PRO	
Item number	**52.26.001**	**52.26.003**
Supply voltage AC	95 ... 240 V AC	48 ... 110 V AC
Supply voltage DC	80 ... 300 V DC	24 ... 150 V DC
Device options		
BACnet communication	**52.26.081**	**52.26.081**
General		
Use in low, medium and high voltage networks		•
Accuracy voltage measurement		0.1 %
Accuracy current measurement		0.2 %
Accuracy active energy (kWh, .../5 A)		Class 0.2S
Number of measurement points per period		400
Uninterrupted measurement		•
RMS - momentary value		
Current, voltage, frequency		•
Active, reactive and apparent power / total and per phase		•
Power factor / total and per phase		•
Energy measurement		
Active, reactive and apparent energy [L1, L2, L3, L4, ∑ L1–L3, ∑ L1–4]		•
Number of tariffs		8
Recording of the mean values		
Voltage, current / actual and maximum		•
Active, reactive and apparent power / actual and maximum		•
Frequency / actual and maximum		•
Demand calculation mode (bi-metallic function) / thermal		•
Other measurements		
Operating hours measurement		•
Clock		•
Weekly timer		Jasic®
Power quality measurements		
Harmonics per order / current and voltage		1st – 63rd
Harmonics per order / active and reactive power		1st – 63rd
Distortion factor THD-U in %		•
Distortion factor THD-I in %		•

Comment:
For detailed technical information please refer to the operation manual and the Modbus address list

• = included - = not included

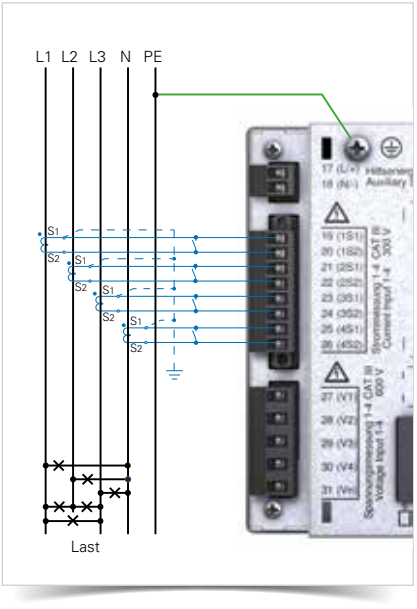

Fig.: Example current measurement

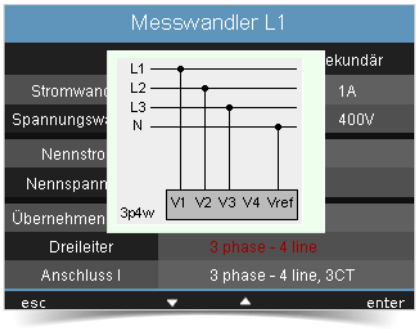

Fig.: Example for the configuration of current measurement via 3 current transformers in a three-phase 4-wire network on the UMG 509-PRO display

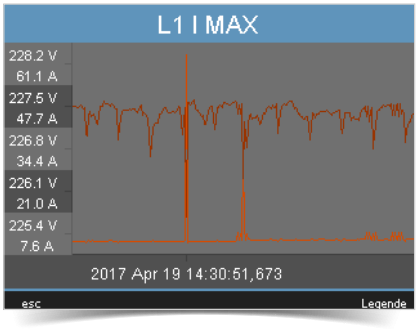

Fig.: Illustration of the full wave effective values for an event (voltage drop)

Comment:
For detailed technical information please refer to the operation manual and the Modbus address list.

• = included - = not included

*1 Optional additional functions with the packages GridVis®-Professional, GridVis®-Service and GridVis®-Ultimate.

*2 With UL variants: 347/600 V

*3 The UMG 509-PRO can only determine measured values, if an L-N voltage of greater than 10 Veff or an L-L voltage of greater than 18 Veff is applied to at least one voltage measurement input.

Voltage unbalance	•
Rotary field indication	•
Current and voltage, positive, zero and negative sequence component	•
Transients	> 50 µs
Error / event recorder function	•
Short-term interruptions	20 ms
Oscillogram recording (waveform U and I)	•
Full wave effective values (U, I, P, Q)	•
Under and overvoltage recording	•
Measured data recording	
Memory (Flash)	256 MB
Average, minimum, maximum values	•
Measured data channels	10
Alarm messages	•
Time stamp	•
Time basis average value	freely user-defined
RMS averaging, arithmetic	•
Displays and inputs / outputs	
LCD colour graphical display 320 x 240, 256 colours, 6 buttons	•
Language selection	•
Digital inputs	2
Digital outputs (as switch or pulse output)	2
Voltage and current inputs	each 4
Residual current inputs	2
Temperature input	1
Password protection	•
Communication	
Interfaces	
RS485: 9.6 – 921.6 kbps (terminal board)	•
Profibus DP: Up to 12 Mbps (DSUB-9-plug)	•
Ethernet 10/100 Base-TX (RJ-45 socket)	•
Protocols	
Modbus RTU, Modbus TCP, Modbus RTU over Ethernet	•
Modbus Gateway for Master-Slave configuration	•
Profibus DP V0	•
HTTP (homepage configurable)	•
SMTP (email)	•
NTP (time synchronisation)	•
TFTP	•
FTP (File-Transfer)	•
SNMP	•
DHCP	•
TCP/IP	•
BACnet (optional)	•
ICMP (Ping)	•
Software GridVis®-Basic*1	
Online and historic graphs	•
Databases (Janitza DB, Derby DB); MySQL, MS SQL with higher GridVis® versions)	•
Manual reports (energy, power quality)	•
Graphical programming	•
Topology views	•
Manual read-out of the measuring devices	•
Graph sets	•
Programming / threshold values / alarm management	
Application programs freely programmable	7
Graphical programming	•
Programming via source code Jasic®	•

Technical data	
Type of measurement	Constant true RMS Up to 63rd harmonic
Nominal voltage, three-phase, 4-conductor (L-N, L-L)	417 / 720 V AC *2
Nominal voltage, three-phase, 3-conductor (L-L)	600 V AC
Measurement in quadrants	4
Networks	TN, TT, IT
Measurement in single-phase/multi-phase networks	1 ph, 2 ph, 3 ph, 4 ph and up to 4 times 1 ph
Measured voltage input	
Overvoltage category	600 V CAT III
Measured range, voltage L-N, AC (without potential transformer)	0*3 ... 600 Vrms

Measured range, voltage L-L, AC (without potential transformer)	0*3 ... 1000 Vrms
Resolution	0.01 V
Impedance	4 MOhm / phase
Frequency measuring range	40 ... 70 Hz
Power consumption	approx. 0.1 VA
Sampling frequency	20 kHz / phase
Measured current input	
Rated current	1 / 5 A
Resolution	0.1 mA
Measurement range	0.005 ... 7 Amps
Overvoltage category	300 V CAT III
Measurement surge voltage	4 kV
Power consumption	approx. 0.2 VA (Ri = 5 MOhm)
Overload for 1 sec.	120 A (sinusoidal)
Sampling frequency	20 kHz
Residual current / Temperature inputs	
Residual current inputs	2
Measurement range, residual current inputs	0,05 ... 30 mA
Temperature input	1
Digital inputs and outputs	
Number of digital inputs	2
Maximum counting frequency	20 Hz
Reaction time (Jasic® program)	200 ms
Input signal present	18 ... 28 V DC (typical 4 mA)
Input signal not present	0 ... 5 V DC, current < 0.5 mA
Number of digital outputs	2
Switching voltage	max. 60 V DC, 30 V AC
Switching current	max. 50 mA Eff AC / DC
Output of voltage dips	20 ms
Pulse output (energy pulse)	max. 20 Hz
Maximum cable length	up to 30 m unscreened, from 30 m screened
Mechanical properties	
Weight	1080 g
Device dimensions in mm (H x W x D)	144 x 144 x approx. 81
Battery	Type CR2450, 3 V, Li-Mn
Protection class per EN 60529	Front: IP40; Rear: IP20
Assembly per IEC EN 60999-1 / DIN EN 50022	Front panel installation
Connecting phase (U / I), Single core, multi-core, fine-stranded Terminal pins, core end sheath	 0.2 to 2.5 mm² 0.2 to 2.5 mm²
Environmental conditions	
Temperature range	Operation: K55 (-10 ... +55 °C)
Relative humidity	Operation: 0 ... 75 % RH
Operating height	0 ... 2,000 m above sea level
Degree of pollution	2
Installation position	user-defined
Electromagnetic compatibility	
Electromagnetic compatibility of electrical equipment	Directive 2004/108/EC
Electrical appliances for application within particular voltage limits	Directive 2006/95/EC
Equipment safety	
Safety requirements for electrical equipment for measurement, regulation, control and laboratory use – Part 1: General requirements	IEC/EN 61010-1
Part 2-030: Particular requirements for testing and measuring circuits	IEC/EN 61010-2-030
Noise immunity	
Class A: Industrial environment	IEC/EN 61326-1
Electrostatic discharge	IEC/EN 61000-4-2
Voltage dips	IEC/EN 61000-4-11
Emissions	
Class B: Residential environment	IEC/EN 61326-1
Radio disturbanc voltage strength 30 – 1000 MHz	IEC/CISPR11/EN 55011
Radiated interference voltage 0.15 – 30 MHz	IEC/CISPR11/EN 55011
Safety	
Europe	CE labelling
USA and Canada	UL variants available
Firmware	
Firmware update	Update via GridVis® software. Firmware download (free of charge) from the website: http://www.janitza.com

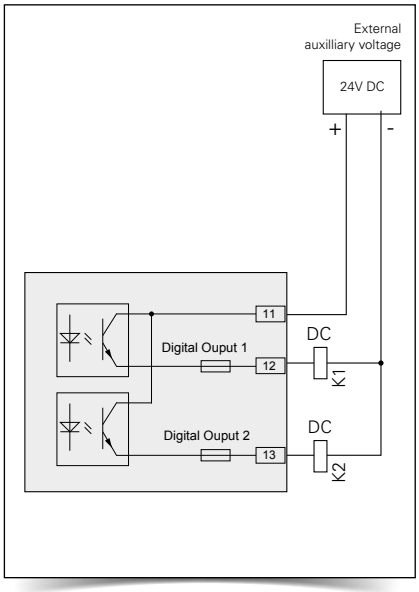

Fig. Example for two electronical relays connected to the digital outputs

Comment:
For detailed technical information please refer to the operation manual and the Modbus address list.

• = included - = not included

*3 The UMG 509-PRO can only determine measured values, if an L-N voltage of greater than 10 Veff or an L-L voltage of greater than 18 Veff is applied to at least one voltage measurement input.

UMG 511

Class A power quality analyser

Class A

Reporting

Harmonics

Flicker

Homepage

Alarm management

Communication
- Profibus (DP/V0)
- Modbus (RTU, TCP, Gateway)
- TCP/IP
- BACnet (optional)
- HTTP (configurable homepage)
- FTP (file transfer)
- TFTP
- NTP (time synchronisation)
- SMTP (email function)
- DHCP
- SNMP

Interfaces
- Ethernet
- Profibus / RS485 (DSUB-9)

Accuracy of measurement
- Energy: Class 0.2S (... / 5 A)
- Current: 0.2 %
- Voltage: 0.1 %

Power quality acc. Class A
- Harmonics up to the 63rd harmonic
- Flicker measurement
- Short-term interruptions (> 10 ms)
- Transient recorder (> 50 µs)
- Starting currents (> 10 ms)
- Unbalance
- Half wave RMS recordings (up to 4.5 min.)

Networks
- IT, TN, TT networks
- 3 and 4-phase networks

Measured data memory
- 256 MByte Flash

Programming language
- Graphical programming
- Jasic®
- PLC functionality

8 digital inputs
- Pulse input
- Logic input
- State monitoring
- HT / LT switching

5 digital outputs
- Pulse output kWh / kvarh
- Switch output
- Threshold value output
- Logic output

(expandable via external I/O modules)

Peak demand management (optional)
- Up to 64 switch-off stages

Network visualisation software
- Free GridVis®-Basic
- PQ Report Generator

Areas of application

- Continuous monitoring of the power quality
- Harmonics analysis with power quality problems
- Checking the internal supply network according to EN 61000-4-7, EN 6100-4-15, EN 61000-4-30
- Fault analysis in case of problems with the energy supply
- Documentation of the power quality for customers and regulatory authorities
- Ethernet Gateway for subordinate measurement points
- Report generator for power quality standards: EN 50160, IEE519, ITIC ...
- Report generator for energy consumptions
- Energy Dashboard
- Remote monitoring of critical processes

Main features

Power quality

- Harmonics analysis up to the 63rd harmonic, even / odd (U, I, P, Q)
- Interharmonics (U, I)
- Distortion factor THD-U / THD-I / TDD
- Measurement of positive, negative and zero sequence component
- Unbalance
- Direction of rotation field
- Voltage crest factor
- Flicker measurement in accordance with DIN EN 61000-4-15
- Logging and storage of transients (> 50 µs)
- Short-term interruptions (> 10 ms)
- Monitoring start-up processes

Certificate of Conformity
IEC 61000-4-30 Class A
Janitza UMG511

Fig.: UMG 511 Class A-certified

High quality measurement

- Constant true RMS measurement
- Measurement process in accordance with IEC 61000-4-30
- Certified accuracy of measurement according to class A
- Continuous sampling of the voltage and current measurement inputs at 20,000 Hz
- 400 measurement points per period
- Recording of over 2,000 measured values per measurement cycle
- Accuracy of active energy measurement: Class 0.2S
- Fast measurement even enables the logging of rapid transients from 50 µs
- Logging of currents and voltages (15 – 440 Hz)

User-friendly, colour graphical display with intuitive user guidance

- High resolution colour graphical display 320 x 240, 256 colours, 6 buttons
- User-friendly, self-explanatory and intuitive operation
- Backlight for optimum reading, even in darker environments
- Illustration of measured values in numeric form, as a bar graph or line graph
- Clear and informative representation of online graphs and power quality events
- Multilingual: German, English, Russian, Spanish, Chinese, French, Japanese, Turkish ...

Fig.: Transients list

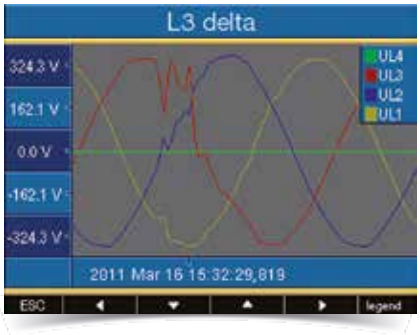

Fig.: Graphical representation of a transient

Various characteristics

- 4 voltage and 4 current measurement inputs, i.e. logging of N and / or PE possible
- 8 digital inputs, e.g. as data logger for S0 meter
- 5 digital outputs for alarm message or e.g. for connection to a BMS or PLC
- Free name assignment for the digital IOs, e.g. if used as data logger

Comprehensive communication and connection possibilities

- Modbus
- Profibus
- Ethernet (TCP/IP)
- Digital IOs
- BACnet (optional)
- Configurable Firewall

Modern communications architecture via Ethernet

- Simple integration in an Ethernet network
- Reliable and cost-optimised establishment of communication
- Ideal for Master-Slave structures
- High flexibility due to the use of open standards
- Integration in PLC systems and BMS through additional interfaces
- Various IP protocols: SNMP, ICMP (Ping), NTP, FTP ...

Measuring device homepage

- Web server on the measuring device, i.e. device's inbuilt homepage
- Function expansion possible through APPs
- Remote operation of the device display via the homepage
- Comprehensive measurement data incl. PQ (transients, events...)
- Online data directly available via the homepage, historic data optional via the APP measured value monitor, 51.00.245

Fig.: Illustration of the historic data via the homepage

BACnet protocol for building communication

- Optimal interoperability between devices from various manufacturers
- Predefined BIBBs (BACnet Interoperability Building Block)
- BACnet is optionally available with UMG 511
- UMG 511 supports the device type B-SA with the BIBBs DS-RP-B and DS-WP-B
- Furthermore, the BIBBs DS-COV-B and DM-UTC-B are also supported

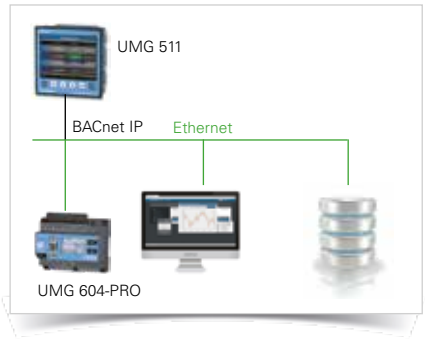

Fig.: BACnet topology

Modbus Gateway function

- Economical connection of subordinate measuring devices without Ethernet interface
- Integration of devices with Modbus-RTU interface possible (harmonisation of data format and function code necessary)
- Data can be scaled and described
- Minimised number of IP addresses required
- Tried and tested integrated solution without additional hardware

Programming / PLC functionality

- Further processing of the measurement data in the measuring device (local intelligence)
- Monitoring and alarm functions simple to program
- Sustainable functional expansions far beyond pure measurement
- Comprehensive programming options with
  - Jasic® source code programming
  - Graphical programming
- Complete APPs from the Janitza library

Large measurement data memory

- 256 MB data memory
- Memory range up to 2 years (configuration-dependent)
- Individually configurable recordings

- Recording averaging times can be freely selected
- PQ recordings template preconfigured for conventional standards (e.g. EN 50160)
- User-defined memory segmenting possible

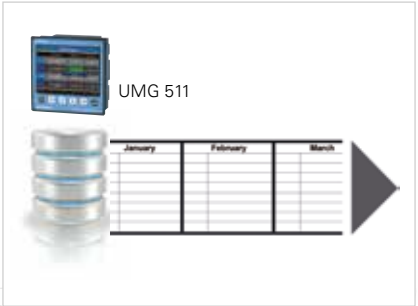

Fig.: Large measurement data memory

Powerful alarm management

- Information available immediately by email
- Inform maintenance personnel via the powerful device homepage
- Via digital outputs, Modbus addresses, GridVis® software
- Programming via Jasic® or graphical programming
- Further alarm management functions via GridVis®-Service alarm management

Fig.: GridVis® alarm management, alarm list (logbook)

Peak load representation and peak load management

- Illustration of the 3 highest monthly power peaks on the LCD display (P, Q, S)
- Rolling bar chart representation of the peak power values over 3 years on the LCD display (P, Q, S)
- Plain text representation on the LCD display (P)

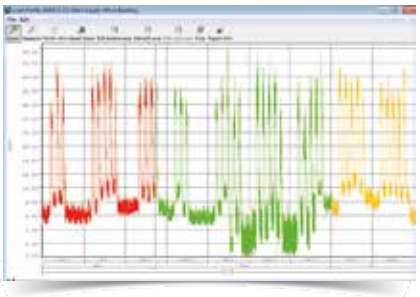
Fig.: GridVis® load profile, asic instrument for EnMS

GridVis®-Basic power quality analysis software

- Multilingual
- Manual read-out of the measuring devices
- Manual report generation (power quality and energy consumption reports)
- Comprehensive PQ analysis with individual graphs
  - Online graphs
  - Historic graphs
  - Graph sets
- Integrated databases (Janitza DB, Derby DB)
- Graphical programming
- Topology views
- High memory range

Certified quality through independent institutes

- ISO 9001
- Energy management certified according to ISO 50001
- Class A certificate (IEC 61000-4-30)
- UL certificate
- EMC-tested product

Dimension diagrams

All dimensions in mm

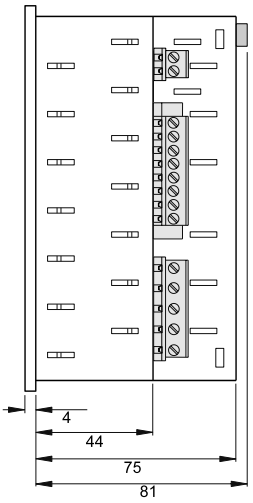

Side view

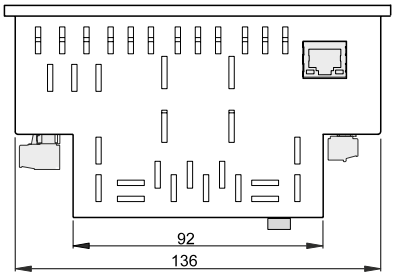

View from below

Rear view

Cut out: $138^{+0,8}$ x $138^{+0,8}$ mm

Typical connection

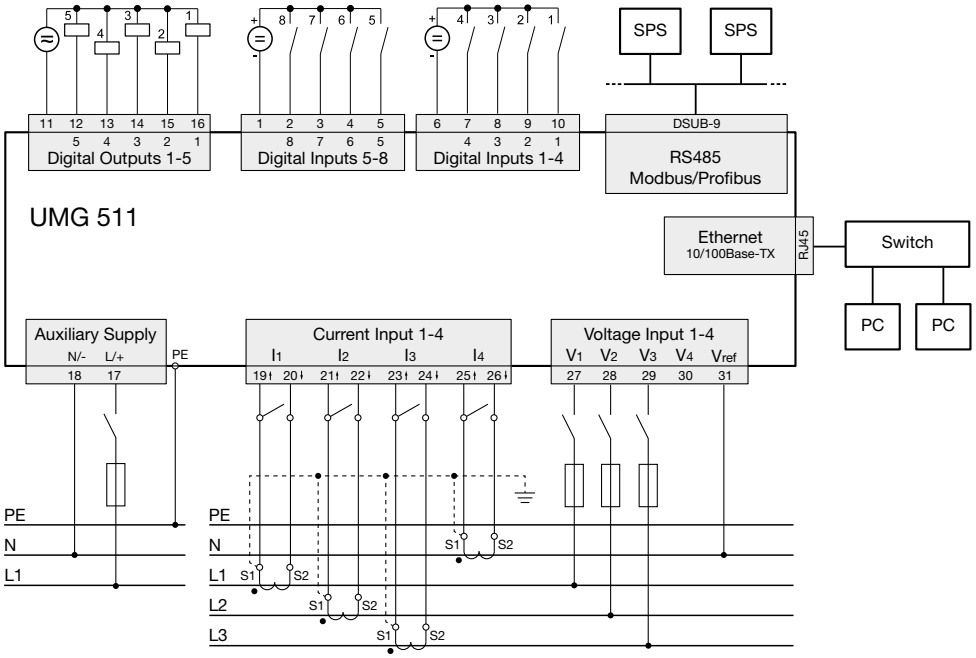

Device overview and technical data

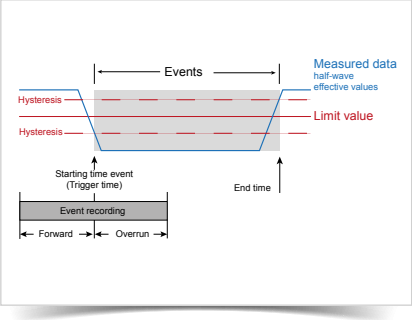

Fig.: The event record consists of a mean value, a minimum or maximum value, a start time and an end time.

	UMG 511	
Item number	**52.19.001**	**52.19.002**
Supply voltage AC	95 ... 240 V AC	44 ... 130 V AC
Supply voltage DC	80 ... 340 V DC	48 ... 180 V DC
Item number (UL)	**52.19.011**	**52.19.012**
Supply voltage AC	95 ... 240 V AC	44 ... 130 V AC
Supply voltage DC	80 ... 280 V DC	48 ... 180 V DC
Device options		
Emax function (peak demand management)	**52.19.080**	**52.19.080**
BACnet communication	**52.19.081**	**52.19.081**

General information	
Use in low, medium and high voltage networks	•
Accuracy voltage measurement	0.1 %
Accuracy current measurement	0.2 %
Accuracy active energy (kWh, .../5 A)	Class 0.2S
Number of measurement points per period	400
Seamless measurement	•
RMS - momentary value	
Current, voltage, frequency	•
Active, reactive and apparent power / total and per phase	•
Power factor / total and per phase	•
Energy measurement	
Active, reactive and apparent energy [L1, L2, L4, L3, ∑ L1–L3, ∑ L1–4]	•
Number of tariffs	8
Recording of the mean values	
Voltage, current / actual and maximum	•
Active, reactive and apparent power / actual and maximum	•
Frequency / actual and maximum	•
Demand calculation mode (bi-metallic function) / thermal	•
Other measurements	
Operating hours measurement	•
Clock	•
Weekly timer	Jasic®
Power quality measurements	
Harmonics per order / current and voltage	1st - 63rd
Harmonics per order / active and reactive power	1st - 63rd
Distortion factor THD-U in %	•
Distortion factor THD-I in %	•
Voltage unbalance	•
Current and voltage, positive, zero and negative sequence component	•
Flicker	•
Transients	> 50 µs
Error / event recorder function	•
Short-term interruptions	10 ms
Oscillogram function (wave form U and I)	•
Ripple voltage signal	•
Under and overvoltage recording	•
Measured data recording	
Memory (Flash)	256 MB
Average, minimum, maximum values	•
Measured data channels	8
Alarm messages	•
Time stamp	•
Time basis average value	freely user-defined
RMS averaging, arithmetic	•

Comment:
For detailed technical information please refer to the operation manual and the Modbus address list.

• = included - = not included

Displays and inputs / outputs	
LCD colour graphical display 320 x 240, 256 colours, 6 buttons	•
Language selection	•
Digital inputs	8
Digital outputs (as switch or pulse output)	5
Voltage and current inputs	each 4
Password protection	•
Peak load management (optionally 64 channels)	•
Communication	
Interfaces	
RS485: 9.6 – 921.6 kbps (DSUB-9 connector)	•
Profibus DP: Up to 12 Mbps (DSUB-9 connector)	•
Ethernet 10/100 Base-TX (RJ-45 socket)	•
Protocols	
Modbus RTU, Modbus TCP, Modbus RTU over Ethernet	•
Modbus Gateway for Master-Slave configuration	•
Profibus DP V0	•
HTTP (homepage configurable)	•
SMTP (email)	•
NTP (time synchronisation)	•
TFTP	•
FTP (file transfer)	•
SNMP	•
DHCP	•
TCP/IP	•
BACnet (optional)	•
ICMP (Ping)	•
Software GridVis®-Basic*1	
Online and historic graphs	•
Databases (Janitza DB, Derby DB); MySQL, MS SQL with higher GridVis® versions)	•
Manual reports (energy, power quality)	•
Graphical programming	•
Topology views	•
Manual read-out of the measuring devices	•
Graph sets	•
Programming / threshold values / alarm management	
Application programs freely programmable	7
Graphical programming	•
Programming via source code Jasic®	•

Technical data	
Type of measurement	Constant true RMS up to the 63rd harmonic
Nominal voltage, three-phase, 4-conductor (L-N, L-L)	417 / 720 V AC *2
Nominal voltage, three-phase, 3-conductor (L-L)	600 V AC
Measurement in quadrants	4
Networks	TN, TT, IT
Measurement in single-phase/multi-phase networks	1 ph, 2 ph, 3 ph, 4 ph and up to 4 times 1 ph
Measured voltage input	
Overvoltage category	600 V CAT III
Measured range, voltage L-N, AC (without potential transformer)	0*3 ... 600 Vrms
Measured range, voltage L-L, AC (without potential transformer)	0*3 ... 1000 Vrms
Resolution	0.01 V
Impedance	4 MOhm / phase
Frequency measuring range	15 ... 440 Hz
Power consumption	approx. 0.1 VA
Sampling frequency	20 kHz / phase
Measured current input	
Rated current	1 / 5 A
Resolution	0.1 mA
Measurement range	0.005 ... 8.5 Amps
Overvoltage category	300 V CAT III
Measurement surge voltage	4 kV
Power consumption	approx. 0.2 VA (Ri = 5 MOhm)
Overload for 1 sec.	120 A (sinusoidal)
Sampling frequency	20 kHz

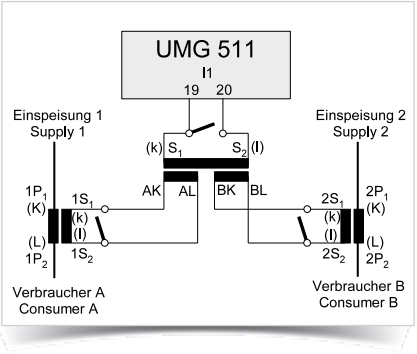

Fig.: Example, current measurement via a summation current transformer

Comment:
For detailed technical information please refer to the operation manual and the Modbus address list.

• = included - = not included

*1 Optional additional functions with the packages GridVis®-Professional, GridVis®-Service and GridVis®-Ultimate.
*2 With UL variants: 347/600 V
*3 The UMG 511 can only ascertain measurement values when a measurement voltage higher than 10 Veff L-N or 18 Veff L-L is applied to at least one voltage measurement input

Digital inputs and outputs	
Number of digital inputs	8
Maximum counting frequency	20 Hz
Reaction time (Jasic® program)	200 ms
Input signal present	18 ... 28 V DC (typically 4 mA)
Input signal not present	0 ... 5 V DC, current < 0.5 mA
Number of digital outputs	5
Switching voltage	max. 60 V DC, 30 V AC
Switching current	max. 50 mA Eff AC / DC
Output of voltage dips	10 ms
Pulse output (energy pulse)	max. 20 Hz
Maximum cable length	up to 30 m unscreened, from 30 m screened
Mechanical properties	
Weight	1080 g
Device dimensions in mm (H x W x D)	144 x 144 x approx. 81
Battery	Type CR1/2AA, 3 V, Li-Mn
Protection class per EN 60529	Front: IP40; Rear: IP20
Assembly per IEC EN 60999-1 / DIN EN 50022	Front panel installation
Connecting phase (U / I), Single core, multi-core, fine-stranded Terminal pins, core end sheath	 0.2 to 2.5 mm² 0.25 to 2.5 mm²
Environmental conditions	
Temperature range	Operation: K55 (-10 ... +55 °C)
Relative humidity	Operation: 0 to 95 % RH
Operating height	0 ... 2,000 m above sea level
Degree of pollution	2
Installation position	user-defined
Electromagnetic compatibility	
Electromagnetic compatibility of electrical equipment	Directive 2004/108/EC
Electrical appliances for application within particular voltage limits	Directive 2006/95/EC
Equipment safety	
Safety requirements for electrical equipment for measurement, regulation, control and laboratory use – Part 1: General requirements	IEC/EN 61010-1
Part 2-030: Particular requirements for testing and measuring circuits	IEC/EN 61010-2-030
Noise immunity	
Class A: Industrial environment	IEC/EN 61326-1
Electrostatic discharge	IEC/EN 61000-4-2
Voltage dips	IEC/EN 61000-4-11
Emissions	
Class B: Residential environment	IEC/EN 61326-1
Radio disturbanc voltage strength 30 – 1000 MHz	IEC/CISPR11/EN 55011
Radiated interference voltage 0.15 – 30 MHz	IEC/CISPR11/EN 55011
Safety	
Europe	CE labelling
USA and Canada	UL variants available
Firmware	
Firmware update	Update via GridVis® software. Firmware download (free of charge) from the website: http://www.janitza.com

Comment:
For detailed technical information please refer to the operation manual and the Modbus address list.

• = included - = not included

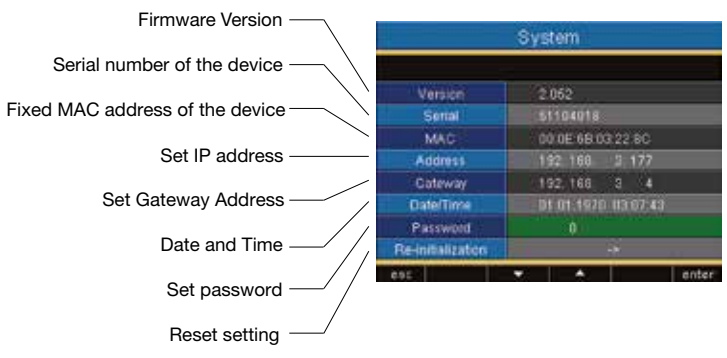

Fig.: User-friendly system of IP addresses, date, time and password

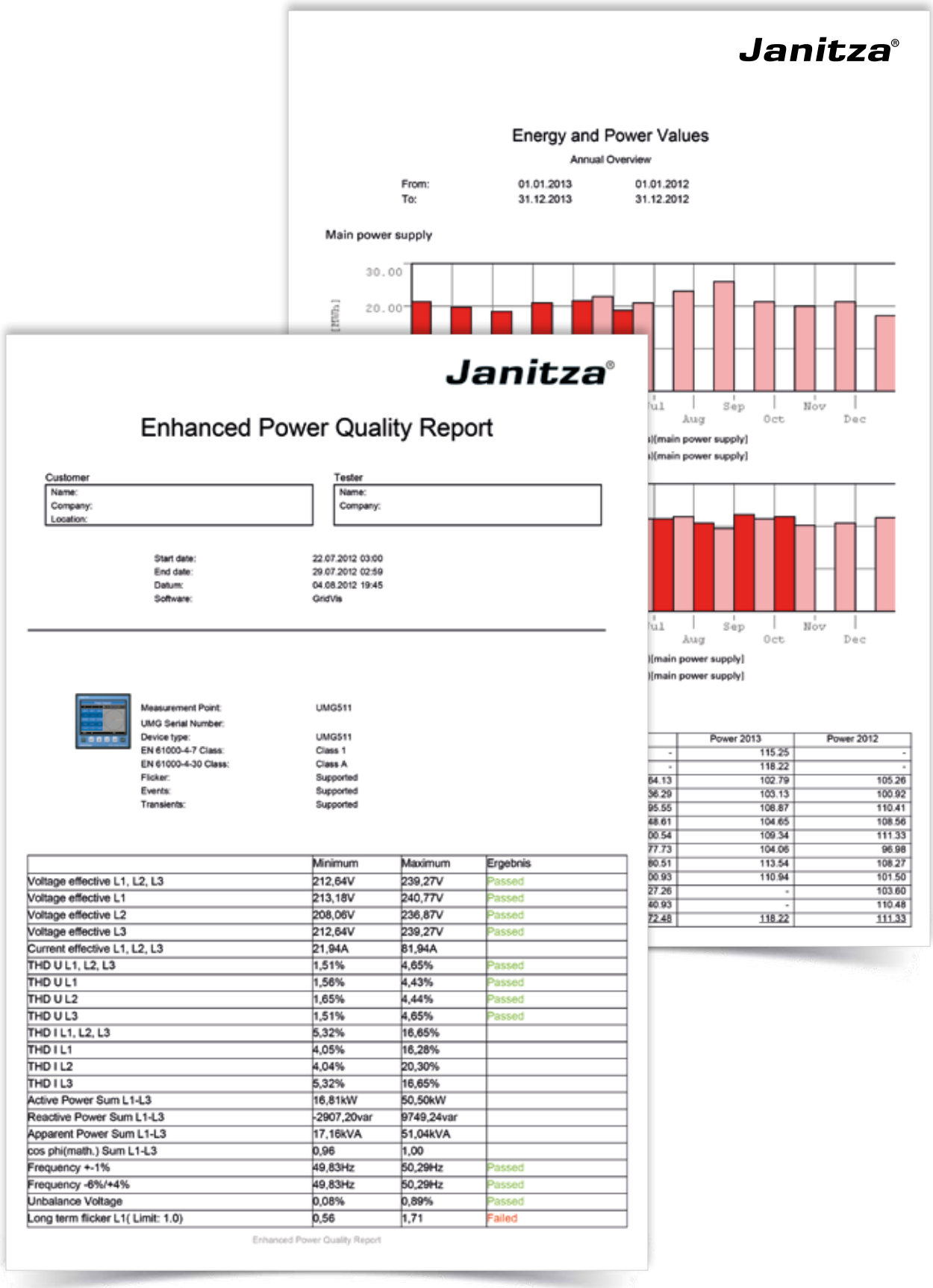

Janitza®

Energy and Power Values

Annual Overview

From:	01.01.2013	01.01.2012
To:	31.12.2013	31.12.2012

Main power supply

	Power 2013	Power 2012
-	115.25	-
-	118.22	-
64.13	102.79	105.26
36.29	103.13	100.92
95.55	108.87	110.41
48.61	104.65	108.56
00.54	109.34	111.33
77.73	104.06	96.98
80.51	113.54	108.27
00.93	110.94	101.50
27.26	-	103.60
40.93	-	110.48
72.48	118.22	111.33

Janitza®

Enhanced Power Quality Report

Customer	Tester
Name:	Name:
Company:	Company:
Location:	

Start date:	22.07.2012 03:00
End date:	29.07.2012 02:59
Datum:	04.08.2012 19:45
Software:	GridVis

Measurement Point:	UMG511
UMG Serial Number:	
Device type:	UMG511
EN 61000-4-7 Class:	Class 1
EN 61000-4-30 Class:	Class A
Flicker:	Supported
Events:	Supported
Transients:	Supported

	Minimum	Maximum	Ergebnis
Voltage effective L1, L2, L3	212,64V	239,27V	Passed
Voltage effective L1	213,18V	240,77V	Passed
Voltage effective L2	208,06V	236,87V	Passed
Voltage effective L3	212,64V	239,27V	Passed
Current effective L1, L2, L3	21,94A	81,94A	
THD U L1, L2, L3	1,51%	4,65%	Passed
THD U L1	1,56%	4,43%	Passed
THD U L2	1,65%	4,44%	Passed
THD U L3	1,51%	4,65%	Passed
THD I L1, L2, L3	5,32%	16,65%	
THD I L1	4,05%	16,28%	
THD I L2	4,04%	20,30%	
THD I L3	5,32%	16,65%	
Active Power Sum L1-L3	16,81kW	50,50kW	
Reactive Power Sum L1-L3	-2907,20var	9749,24var	
Apparent Power Sum L1-L3	17,16kVA	51,04kVA	
cos phi(math.) Sum L1-L3	0,96	1,00	
Frequency +-1%	49,83Hz	50,29Hz	Passed
Frequency -6%/+4%	49,83Hz	50,29Hz	Passed
Unbalance Voltage	0,08%	0,89%	Passed
Long term flicker L1(Limit: 1.0)	0,56	1,71	Failed

Enhanced Power Quality Report

Fig.: Automatically generated power quality and energy report

Certificated

UMG 512-PRO

Class A power quality analyser with RCM

Class A

Reporting

Harmonics

Residual current monitoring

Alarm management

Voltage quality

Communication
- Profibus (DP/V0)
- Modbus (RTU, TCP, Gateway)
- TCP/IP
- BACnet (optional)
- HTTP
- FTP (file transfer)
- TFTP
- NTP (time synchronisation)
- SMTP (email function)
- DHCP
- SNMP

Interfaces
- Ethernet
- Profibus (DSUB-9)
- RS485 Modbus (terminal strip)

Accuracy of measurement
- Energy: Class 0.2S (... / 5 A)
- Current: 0.1 %
- Voltage: 0.1 %

Networks
- IT, TN, TT networks
- 3 and 4-phase networks

Power quality
- Harmonics up to the 63rd harmonic, odd / even
- Flicker measurement
- Short term interruptions (from 10 ms)
- Transient recorder (> 39 µs)
- Start-up currents (> 10 ms)
- Imbalance
- Half wave RMS recordings (up to 11 min.)
- Events can be displayed as waveforms

Measured data memory
- 256 MByte Flash
- 32 MB SDRAM

Programming language
- Graphical programming
- Jasic®
- PLC functionality

Network visualisation software
- Free GridVis®-Basic

2 digital inputs
- Pulse input
- Logic input
- State monitoring
- HT / LT switching

2 digital outputs
- Pulse output kWh / kvarh
- Switch output
- Threshold value output
- Logic output

Thermistor input
- PT100, PT1000, KTY83, KTY84

RCM – Residual Current Monitoring
- 2 residual current inputs

Areas of application

- Continuous monitoring of the power quality
- Harmonics analysis with power quality problems
- Checking the internal supply network according to EN 61000-4-7, EN 6100-4-15, EN 61000-4-30
- Fault analysis in case of problems with the energy supply
- Documentation of the power quality for customers and regulatory authorities
- Ethernet Gateway for subordinate measurement points
- Report generator for power quality standards: EN 50160, IEE519, EN61000-2-4, ITIC ...
- Report generator for energy consumptions
- Energy Dashboard
- Remote monitoring of critical processes

Main features

Power quality

- Harmonics analysis up to the 63rd harmonic, even / odd (U, I, P, Q)
- Interharmonics (U, I)
- Distortion factor THD-U / THD-I / TDD
- Measurement of positive, negative and zero sequence component
- Unbalance
- Direction of rotation field
- Voltage crest factor
- Flicker measurement in accordance with DIN EN 61000-4-15
- Logging and storage of transients (> 39 µs)
- Short-term interruptions (> 10 ms)
- Monitoring start-up processes

COMPLIANCE TEST ACCORDING TO
IEC 61000-4-30 ED.2

Janitza UMG 512

Power Quality Parameter	Class A Compliance
Power frequency	Yes
Magnitude of supply voltage	Yes
Flicker	Yes
Supply voltage unbalance	Yes
Voltage dips, swells and interruptions	Yes
Voltage harmonics	Yes
Voltage interharmonics	Yes
Mains signaling	Yes
Time-clock uncertainty	Yes

Fig.: UMG 512-PRO Class A certificated

High quality measurement

- Constant true RMS measurement
- Measurement process in accordance with IEC 61000-4-30
- Certified accuracy of measurement according to class A
- Continuous sampling of the voltage and current measurement inputs at 25,6 kHz
- 512 measurement points per period
- Recording of over 2,000 measured values per measurement cycle
- Accuracy of active energy measurement: Class 0.2S
- Fast measurement even enables the logging of rapid transients from 39 µs
- Logging of currents and voltages (15 – 440 Hz)

RCM (Residual Current Monitoring)

- Continuous monitoring of residual currents (Residual Current Monitor, RCM)
- Alarming in case a preset threshold fault current reached
- Near-realtime reactions for triggering countermeasures
- Permanent RCM measurement for systems in permanent operation without the opportunity to switch off
- Ideal for the central earthing point in TN-S systems

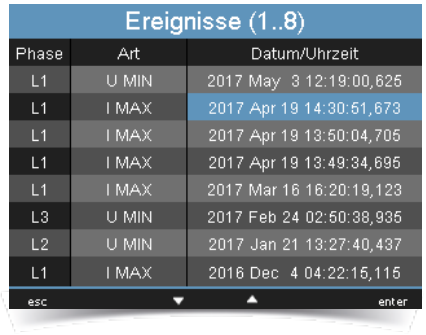

Fig.: Event list

User-friendly, colour graphical display with intuitive user guidance

- High resolution colour graphical display 320 x 240, 256 colours, 6 buttons
- User-friendly, self-explanatory and intuitive operation
- Backlight for optimum reading, even in darker environments
- Illustration of measured values in numeric form, as a bar graph or line graph
- Clear and informative representation of online graphs and power quality events
- Multilingual: German, English, Russian, Spanish, Chinese, French, Turkish ...

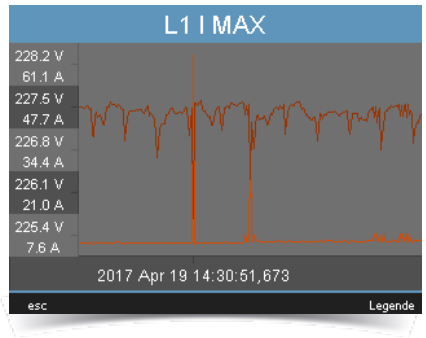

Fig.: Graphical event display (voltage drop)

Various characteristics

- 4 voltage and 6 current measurement inputs
- 2 digital inputs, e.g. as data logger for S0 meter
- 2 digital outputs for alarm message or e.g. for connection to a BMS or PLC
- Free name assignment for the digital IOs, e.g. if used as data logger

Comprehensive communication and connection possibilities

- Modbus
- Profibus
- Ethernet (TCP/IP)
- Digital IOs
- BACnet (optional)
- Configurable Firewall

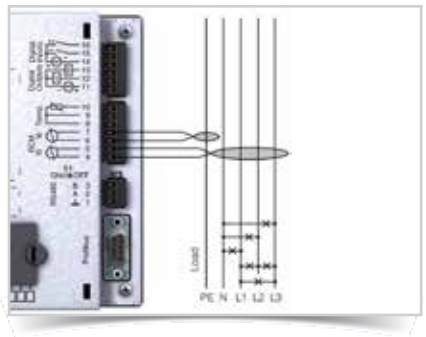

Abb.: Connection example of residual current monitoring and PE via current transformers

Modern communications architecture via Ethernet

- Simple integration in an Ethernet network
- Reliable and cost-optimised establishment of communication
- Ideal for Master-Slave structures
- High flexibility due to the use of open standards
- Integration in PLC systems and BMS through additional interfaces
- Various IP protocols: SNMP, ICMP (Ping), NTP, FTP ...
- Up o 4 ports simultaneous

Fig.: Illustration of the historic data via the homepage (APP measurement monitor)

Measuring device homepage

- Web server on the measuring device, i.e. device's inbuilt homepage
- Function expansion possible through APPs
- Remote operation of the device display via the homepage
- Comprehensive measurement data incl. PQ (transients, events...)
- Online data directly available via the homepage, historic data optional via the APP measured value monitor, 51.00.245

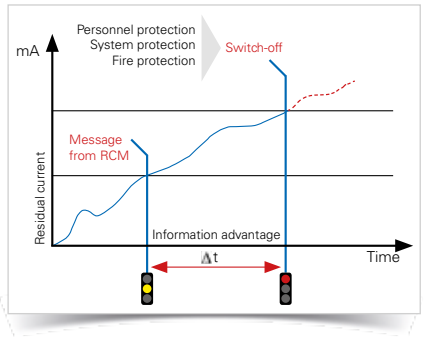

Fig.: Report prior to switching off – an aim of residual current monitoring

BACnet protocol for building communication

- Optimal interoperability between devices from various manufacturers
- Predefined BIBBs (BACnet Interoperability Building Block)
- BACnet is optionally available with UMG 512-PRO
- UMG 512-PRO supports the device type B-SA with the BIBBs DS-RP-B and DS-WP-B
- Furthermore, the BIBBs DS-COV-B and DM-UTC-B are also supported

Modbus Gateway function

- Economical connection of subordinate measuring devices without Ethernet interface
- Integration of devices with Modbus-RTU interface possible (harmonisation of data format and function code necessary)
- Data can be scaled and described
- Minimised number of IP addresses required
- Tried and tested integrated solution without additional hardware

Programming / PLC functionality

- Further processing of the measurement data in the measuring device (local intelligence)
- Monitoring and alarm functions simple to program
- Sustainable functional expansions far beyond pure measurement
- Comprehensive programming options with
  - Jasic® source code programming
  - Graphical programming
- Complete APPs from the Janitza library

Large measurement data memory

- 256 MB data memory
- Memory range up to 2 years (configuration-dependent)
- Individually configurable recordings
- Recording averaging times can be freely selected
- PQ recordings template preconfigured for conventional standards (e.g. EN 50160)
- User-defined memory segmenting possible

Abb.: Heatmap – total number of breaches of EN 50160

Powerful alarm management

- Information available immediately by email
- Inform maintenance personnel via the powerful device homepage
- Via digital outputs, Modbus addresses, GridVis® software
- Programming via Jasic® or graphical programming
- Further alarm management functions via GridVis®-Service alarm management

Fig.: GridVis® alarm management, alarm list (logbook)

Peak load representation

- Illustration of the 3 highest monthly power peaks on the LCD display (P, Q, S)
- Rolling bar chart representation of the peak power values over 3 years on the LCD display (P, Q, S)
- Plain text representation on the LCD display (P)

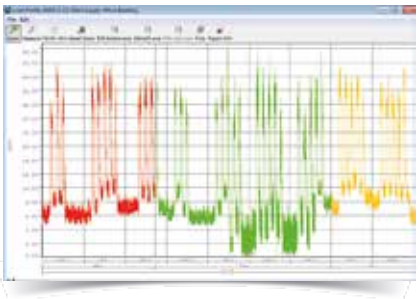

Fig.: GridVis® load profile, asic instrument for EnMS

GridVis®-Basic power quality analysis software

- Multilingual
- Manual read-out of the measuring devices
- Manual report generation (power quality and energy consumption reports)
- Comprehensive PQ analysis with individual graphs
  - Online graphs
  - Historic graphs
  - Graph sets
- Integrated databases (Janitza DB, Derby DB)
- Graphical programming
- Topology views
- High memory range

Certified quality through independent institutes

- ISO 9001
- Energy management certified according to ISO 50001
- Class A certificate (IEC 61000-4-30)
- UL certificate
- EMC-tested product

Dimension diagrams

All dimensions in mm

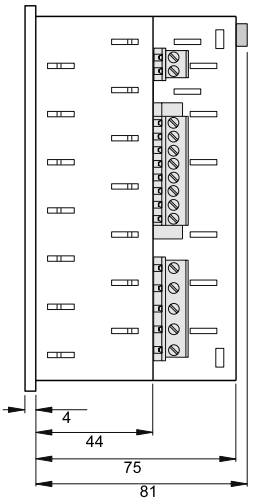

Side view

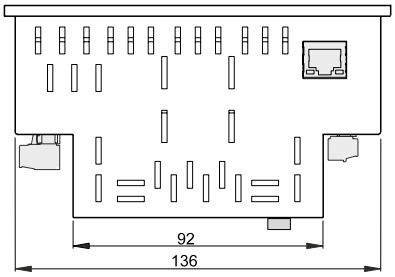

View from below

Rear view

Cut out: 138$^{+0,8}$ x 138$^{+0,8}$ mm

Typical connection

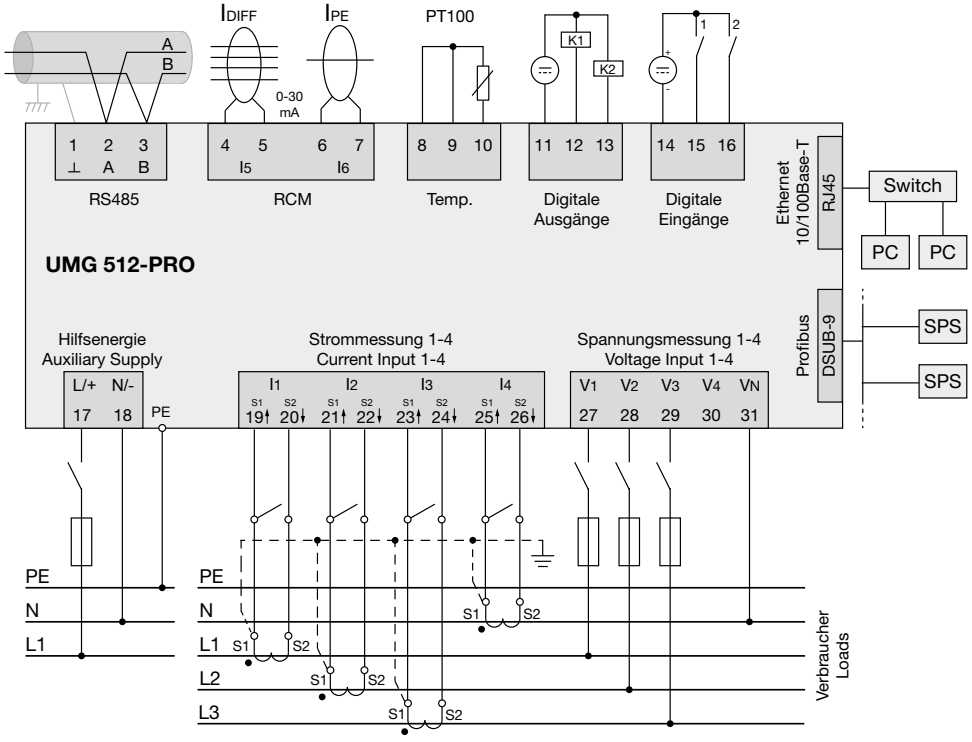

Device overview and technical data

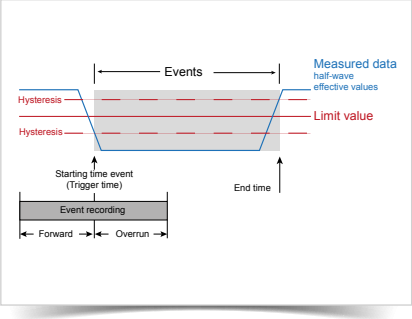

Fig.: The event record consists of a mean value, a minimum or maximum value, a start time and an end time.

	UMG 512-PRO	
Item number	**52.17.011**	**52.17.003**
Supply voltage AC	95 ... 240 V AC	48 ... 110 V AC
Supply voltage DC	80 ... 300 V DC	24 ... 150 V DC
Device options		
BACnet communication	**52.17.081**	**52.17.081**

General information	
Use in low, medium and high voltage networks	•
Accuracy voltage measurement	0.1 %
Accuracy current measurement	0.1 %
Accuracy active energy (kWh, .../5 A)	Class 0.2S
Number of measurement points per period	512
Seamless measurement	•
RMS - momentary value	
Current, voltage, frequency	•
Active, reactive and apparent power / total and per phase	•
Power factor / total and per phase	•
Energy measurement	
Active, reactive and apparent energy [L1, L2, L4, L3, ∑ L1–L3, ∑ L1–4]	•
Number of tariffs	8
Recording of the mean values	
Voltage, current / actual and maximum	•
Active, reactive and apparent power / actual and maximum	•
Frequency / actual and maximum	•
Demand calculation mode (bi-metallic function) / thermal	•
Other measurements	
Operating hours measurement	•
Clock	•
Weekly timer	Jasic®
Power quality measurements	
Harmonics per order / current and voltage	1st - 63rd
Harmonics per order / active and reactive power	1st - 63rd
Distortion factor THD-U in %	•
Distortion factor THD-I in %	•
Voltage unbalance	•
Current and voltage, positive, zero and negative sequence component	•
Flicker	•
Transients	> 39 µs
Error / event recorder function	•
Short-term interruptions	10 ms
Oscillogram function (wave form U and I)	•
Ripple voltage signal	•
Under and overvoltage recording	•
Measured data recording	
Memory (Flash)	256 MB
Average, minimum, maximum values	•
Measured data channels	10
Alarm messages	•
Time stamp	•
Time basis average value	freely user-defined
RMS averaging, arithmetic	•

Comment:
For detailed technical information please refer to the operation manual and the Modbus address list.

• = included - = not included

Displays and inputs / outputs	
LCD colour graphical display 320 x 240, 256 colours, 6 buttons	•
Language selection	•
Digital inputs	2
Digital outputs (as switch or pulse output)	2
Voltage and current inputs	each 4
Residual current inputs	2
Temperature input	1
Password protection	•
Communication	
Interfaces	
RS485: 9.6 – 921.6 kbps (terminal board)	•
Profibus DP: Up to 12 Mbps (DSUB-9 connector)	•
Ethernet 10/100 Base-TX (RJ-45 socket)	•
Protocols	
Modbus RTU, ModbusTCP, Modbus RTU over Ethernet	•
Modbus Gateway for Master-Slave configuration	•
Profibus DP V0	•
HTTP (homepage configurable)	•
SMTP (email)	•
NTP (time synchronisation)	•
TFTP	•
FTP (file transfer)	•
SNMP	•
DHCP	•
TCP/IP	•
BACnet (optional)	•
ICMP (Ping)	•
Software GridVis®-Basic*1	
Online and historic graphs	•
Databases (Janitza DB, Derby DB)	•
Manual reports (energy, power quality)	•
Graphical programming	•
Topology views	•
Manual read-out of the measuring devices	•
Graph sets	•
Programming / threshold values / alarm management	
Application programs freely programmable	7
Graphical programming	•
Programming via source code Jasic®	•

Technical data	
Type of measurement	Constant true RMS up to the 63rd harmonic
Nominal voltage, three-phase, 4-conductor (L-N, L-L)	417 / 720 V AC *2
Nominal voltage, three-phase, 3-conductor (L-L)	600 V AC
Measurement in quadrants	4
Networks	TN, TT, IT
Measurement in single-phase/multi-phase networks	1 ph, 2 ph, 3 ph, 4 ph and up to 4 times 1 ph
Measured voltage input	
Overvoltage category	600 V CAT III
Measured range, voltage L-N, AC (without potential transformer)	0*3 ... 600 Vrms
Measured range, voltage L-L, AC (without potential transformer)	0*3 ... 1000 Vrms
Resolution	0.01 V
Impedance	4 MOhm / phase
Frequency measuring range	15 ... 440 Hz
Power consumption	approx. 0.1 VA
Sampling frequency	25,6 kHz / phase
Measured current input	
Rated current	1 / 5 A
Resolution	0.1 mA
Measurement range	0.005 ... 7 Amps
Overvoltage category	300 V CAT III
Measurement surge voltage	4 kV
Power consumption	approx. 0.2 VA (Ri = 5 MOhm)
Overload for 1 sec.	120 A (sinusoidal)
Sampling frequency	25,6 kHz

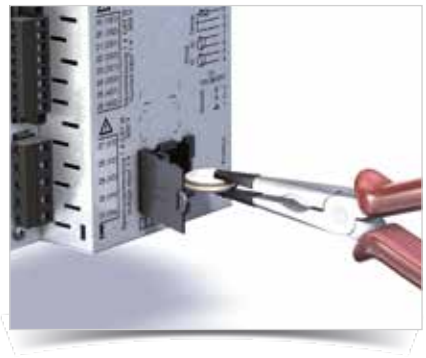

Abb.: Replacing the battery using long-nose pliers

Comment:
For detailed technical information please refer to the operation manual and the Modbus address list.

• = included - = not included

*1 Optional additional functions with the packages GridVis®-Professional, GridVis®-Service and GridVis®-Ultimate.
*2 With UL variants: 347/600 V
*3 The device can only determine measured values, if an L-N voltage of greater than 10 Veff or an L-L voltage of greater than 18 Veff is applied to at least one voltage measurement input.

Digital inputs and outputs	
Number of digital inputs	2
Maximum counting frequency	20 Hz
Reaction time (Jasic® program)	200 ms
Input signal present	18 ... 28 V DC (typically 4 mA)
Input signal not present	0 ... 5 V DC, current < 0.5 mA
Number of digital outputs	2
Switching voltage	max. 60 V DC, 30 V AC
Switching current	max. 50 mA Eff AC / DC
Output of voltage dips	10 ms
Pulse output (energy pulse)	max. 20 Hz
Maximum cable length	up to 30 m unscreened, from 30 m screened
Mechanical properties	
Weight	1080 g
Device dimensions in mm (H x W x D)	144 x 144 x approx. 81
Battery	Type Li-Mn CR2450, 3 V (approval i.a.w. UL 1642)
Protection class per EN 60529	Front: IP40; Rear: IP20
Assembly per IEC EN 60999-1 / DIN EN 50022	Front panel installation
Connecting phase (U / I), Single core, multi-core, fine-stranded Terminal pins, core end sheath	 0.2 to 2.5 mm² 0.25 to 2.5 mm²
Environmental conditions	
Temperature range	Operation: K55 (-10 ... +55 °C)
Relative humidity	Operation: 0 to 95 % RH
Operating height	0 ... 2,000 m above sea level
Degree of pollution	2
Installation position	user-defined
Electromagnetic compatibility	
Electromagnetic compatibility of electrical equipment	Directive 2004/108/EC
Electrical appliances for application within particular voltage limits	Directive 2006/95/EC
Equipment safety	
Safety requirements for electrical equipment for measurement, regulation, control and laboratory use – Part 1: General requirements	IEC/EN 61010-1
Part 2-030: Particular requirements for testing and measuring circuits	IEC/EN 61010-2-030
Noise immunity	
Class A: Industrial environment	IEC/EN 61326-1
Electrostatic discharge	IEC/EN 61000-4-2
Voltage dips	IEC/EN 61000-4-11
Emissions	
Class B: Residential environment	IEC/EN 61326-1
Radio disturbanc voltage strength 30 – 1000 MHz	IEC/CISPR11/EN 55011
Radiated interference voltage 0.15 – 30 MHz	IEC/CISPR11/EN 55011
Safety	
Europe	CE labelling
USA and Canada	UL variants available
Firmware	
Firmware update	Update via GridVis® software. Firmware download (free of charge) from the website: http://www.janitza.com

Comment:
For detailed technical information please refer to the operation manual and the Modbus address list.

• = included - = not included

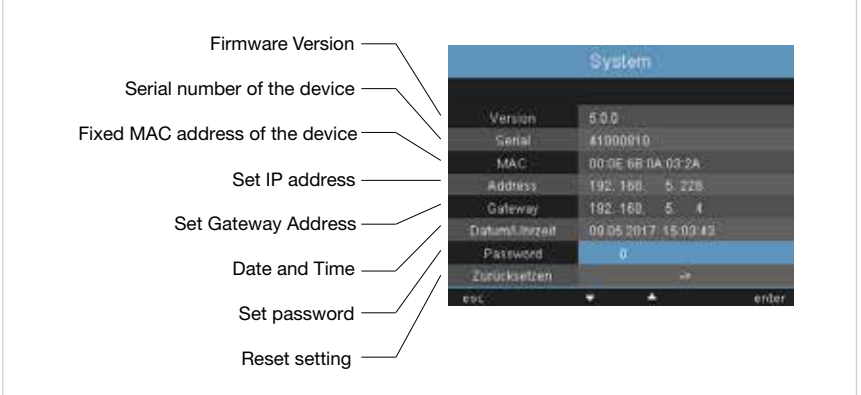

Fig.: User-friendly system of IP addresses, date, time and password

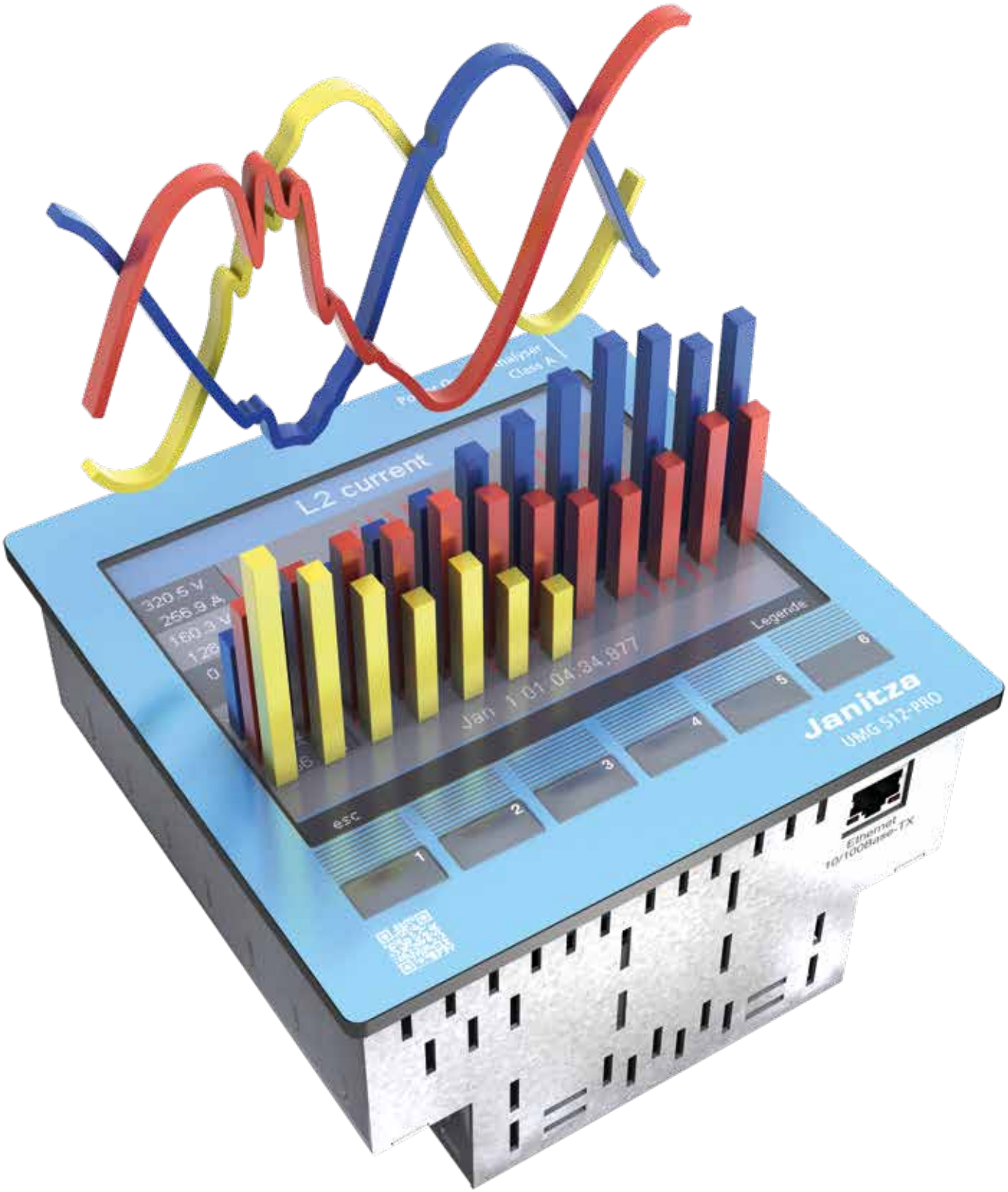
L2 current
320.5 V
256.9 A
160.3 V
128
0
Jan 1 01 04:34.877
Legende
esc
1
2
3
4
5
6
Janitza
UMG 512-PRO
Ethernet
10/100Base-TX

MRG 96RM-E RCM Flex & MRG 512-PRO PQ Flex

Communication
- Modbus over TCP/IP
- BACnet (optional)
- HTTP
- FTP (File-Transfer)
- TFTP
- NTP (Zeitsynchronisierung)
- SMTP (E-Mail-Funktion)
- DHCP
- SNMP

Interfaces
- Ethernet 10/100Base-TX

RCM – Residual Current Monitoring
- 2 residual current inputs

Power quality
- Harmonics up to the 40th (MRG 96RM-E) or 63rd (MRG 512-PRO) harmonic
- Distortion factor THD-U / THD-I / TDD
- Measurement of positive, negative and zero sequence component (only MRG 512-PRO)
- Direction of rotation field
- Acquisition of short-term interruptions
- Transient recorder, 39 µs (only MRG 512-PRO)
- Starting currents (from 20 ms)
- Unbalance (only MRG 512-PRO)
- Flicker measurement per EN 61000-4-15 (only MRG 511 Flex)
- Display of waveforms (only MRG 512-PRO)

Buffered UPS (only MRG 512-PRO)
- Up to 3 hrs

PLC functionality (only MRG 512-PRO)
- Graphical programming
- Jasic® programming language

Networks
- TN, TT networks
- 3 and 4-phase networks
- Up to 4 single-phase networks

Network visualisation software
- Free GridVis®-Basic

Rogowski coil (300 mm)
- 100 – 4.000 A
- Measured range 250 A, 500 A, 1000 A, 2000 A, 4000 A

Areas of application

- High quality PQ analysis at class A level (IEC 61000-4-30)
- Temporary measurement e.g. for the design of power factor correction systems
- Analysis of electrical disturbances in the event of PQ problems
- Fault analysis with power quality problems
- High quality comparative measurement of energy measurement devices and meters
- Calibration of measurement devices (ISO 50001 audit)
- Recording of residual currents over an external current transformer (not included in the scope of delivery)

Main features

- Monitoring of the power quality
- Capturing of all power quality parameters (harmonics, short-term interruptions, asymmetries etc.)
- Remote access via Ethernet and embedded web server
- GridVis® PQ analysis software
- Standard PQ reports, depending on the version: EN 50160 , IEEE519, ITIC, EN 61000-2-4
- Cost centre report
- Large 256 MB internal memory for storing measurement data
- UPS-supported power supply for up to 3 hours

Fig.: MRG 512-PRO PQ Flex –
Portable power quality analyser with RCM
(Image similar)

MRG 512-PRO PQ Flex: User-friendly, colour graphical display with intuitive user guidance

- High resolution graphics display
- User-friendly, self-explanatory and intuitive operation
- Clear and informative representation of online graphs and further power quality events

Fig.: MRG 96RM-E RCM Flex –
Portable energy measurement device with RCM
(Image similar)

Modern communications architecture via Ethernet

- Ethernet interface and web server
- Faster, better cost-optimised and more reliable communication system
- High flexibility due to the use of open standards

Large measurement data memory

- 256 MByte
- Recording range of up to 2 years, depending on the recording configuration
- Recording freely configurable

RCM (Residual Current Monitoring)

- Continuous monitoring of residual currents (Residual Current Monitoring, RCM)
- Alarming in case a preset threshold fault current reached
- Near-realtime reactions for triggering countermeasures
- Permanent RCM measurement for systems in permanent operation without the opportunity to switch off
- Ideal for the central earthing point in TN-S systems

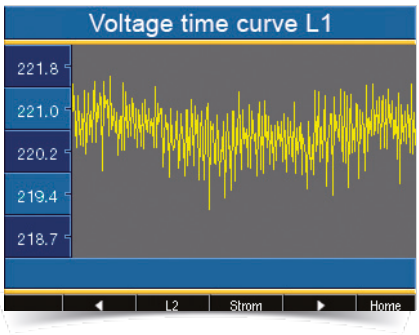

Fig.: Colour graphical display MRG 512-PRO PQ Flex – Example voltage profile over time

Graphical programming (only MRG 512-PRO)

- Comprehensive programming options (PLC functionality)
- Jasic® source code programming
- Sustainable functional expansions far beyond pure measurement
- Complete APPs from the Janitza library

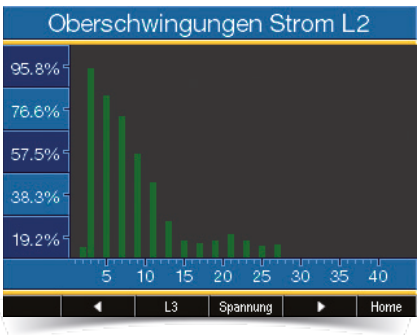

Fig.: Colour graphical display MRG 512-PRO PQ Flex – Example harmonics analysis

Scope of delivery for the MRG product range

- Compact, robust plastic housing with measurement device and all connections
- UPS-supported power supply for up to 3 hours
- Supplementary description for each measurement device
- Operation manual for each measurement device
- DVD with following content:
  - Programming software GridVis®-Basic
  - Functional description - GridVis®
- Carry soft bag for accessories
- Mains connection cable
- 1 Crossover patch cable, CAT5e
- 1 set of voltage measuring cables with fuses (brown, black, grey, blue, green/yellow)
- Voltage tap-offs
- 2 connection cable 3 m for residual current measuring with connector
- Incl. Rogowski coil Ø 95 mm (MRG 96RM-E RCM Flex), Ø 175 mm (MRG 512-PRO PQ Flex); length 300 mm

Fig.: Measurement connection for current transformer and voltage; auxiliary voltage and ethernet connection

Optional accessories:
Differential current transformer on request.

Device overview and technical data

	MRG 96RM-E RCM Flex	MRG 512-PRO PQ Flex
Item number	**52.16.906**	**52.16.905**
Interfaces		
Ethernet 10/100 Base-TX (RJ-45 socket)	•	•
Measurement of the power quality		
Harmonics per order / current and voltage	1. – 40.	1. – 63.
Harmonics per order / active and reactive power	1. – 40.	1. - 63.
Interharmonics - current / voltage	-	•
Flicker: Short term, long term, present	-	•
Measured data recording		
Memory (Flash)	256 MB	256 MB
Measured voltage input		
Overvoltage category	600 V CAT III	600 V CAT III
Displays and inputs / outputs		
LCD display	LCD display with backlight, 2 buttons	Colour graphical display 320 x 240, 256 colours, 6 buttons

General	MRG 96RM-E RCM Flex	MRG 512-PRO PQ Flex
Use in low and medium voltage networks	•	•
Accuracy of measurement with voltage	0.2 %	0.1%
Accuracy of measurement with current	0.2 %	0.1%
Accuracy of measurement with active energy (kWh, .../5 A)	Class 0.5S	Class 0.2S
Number of measurement points per period	426	512
Uninterrupted measurement	•	•
RMS - momentary value		
Current, voltage, frequency	•	•
Active, reactive and apparent power / total and per phase	•	•
Power factor / total and per phase	•	•
Energy measurement		
Active, reactive and apparent energy [L1, L2, L3, L4, Σ L1–3,Σ L1–4]	•	•
Recording of the mean values		
Voltage, current / actual and maximum	•	•
Active, reactive and apparent power / actual and maximum	•	•
Frequency / actual and maximum	•	•
Requirement calculation mode (bi-metallic function) / thermal	•	•
Other measurements		
Operating hours measurement	•	•
Clock	•	•
Measurement of the power quality		
Distortion factor THD-U in %	•	•
Distortion factor THD-I in %	•	•
Current and voltage, positive, zero and negative sequence component	•	•
Transients	-	> 39 µs
Error / event plotter function	•	•
Short term interruptions	•	•
Oscillogram function (wave form U and I)	-	•
Under and overvoltage recording	•	•
Measured data recording		
Mean, minimum, maximum values	•	•
Alarm messages	•	•
Time stamp	•	•
Time basis mean value	freely user-defined	freely user-defined
RMS averaging, arithmetic	•	•
Displays and inputs / outputs		
Analogue inputs (RCM, analogue)	•	•
Voltage and current inputs	L1, L2, L3 + N	every 4
Password protection	•	•

Comment:
For detailed technical information, please refer to the operation manual and the Modbus address list.

• = included
– = not included

Fig.: Rogowski coil with measurement transducer

Fig.: Voltage taps

Comment:
For detailed technical information, please refer to the operation manual and the Modbus address list.

• = included
– = not included

*1 Optional additional functions with the packages GridVis®-Professional, GridVis®-Service and GridVis®-Ultimate.

*2 The UMG 96RM-E can only detect measurements when a voltage L1-N greater than 20 Veff (4-wire measurement) at voltage input V1 or a voltage L1-L2 greater than 34 Veff (3-wire measurement) is applied.

*3 The UMG 512-PRO can only determine measured values, if an L-N voltage of greater than 10 Veff or an L-L voltage of greater than 18 Veff is applied to at least one voltage measurement input.

	MRG 96RM-E RCM Flex	MRG 512-PRO PQ Flex
Protocols		
Modbus TCP, Modbus RTU over Ethernet	•	•
HTTP (homepage configurable)	•	•
SMTP (email)	•	•
NTP (time synchronisation)	•	•
TFTP (automatic configuration)	•	•
FTP (file transfer)	•	•
SNMP	•	•
DHCP	•	•
TCP/IP	•	•
BACnet (optional)	•	•
ICMP (Ping)	•	•
Software GridVis® Basic *1		
Online graphs	•	•
Historical graphs	•	•
Databases (Janitza DB, Derby DB)	•	•
Manual reports (energy, power quality)	•	•
Graphical programming	-	•
Topology views	•	•
Manual read-out of the measuring devices	•	•
Graph sets	•	•
Programming / threshold values / alarm management		
Application programs freely programmable	-	7
Graphical programming	-	•
Programming via source code Jasic®	-	•
Comparator (5 Groups with 10 comparators each)	•	-
Technical data		
Nominal voltage, three-phase, 4-conductor (L-N, L-L)	277 / 480 V AC	417 / 720 V AC
Nominal voltage, three-phase, 3-conductor (L-L)	480 V AC	600 V AC
Measurement in which quadrants	4	4
Networks	TN, TT, IT	TN, TT
Measurement in single-phase/multi-phase networks	1 ph, 2 ph, 3 ph, 4 ph	1 ph, 2 ph, 3 ph, 4 ph and up to 4 times 1 ph
Measured voltage input		
Metering range, voltage L-N, AC (without transformer)	0*2 ... 300 Vrms	0*3 ... 600 Vrms
Metering range, voltage L-L, AC (without transformer)	0*2 ... 520 Vrms	0*3 ... 1000 Vrms
Resolution	0.01 V	0.01 V
Impedance	3 MOhm / phase	4 MOhm / phase
Frequency measuring range	45 to 65 Hz	15 ... 440 Hz
Power consumption	approx. 0.1 VA	approx. 0.1 VA
Measured current input		
Rated current	5 A	5 A
Resolution	0.1 mA	0.1 mA
Metering range	0.001 - 6 Amps	0.001 - 7 Amps
Overvoltage category	300 V CAT II	300 V CAT III
Measurement surge voltage	2 kV	6 kV
Power consumption	approx. 0.2 VA (Ri = 5 mOhm)	approx. 0.1 VA (Ri = 5 MOhm)
Overload for 1 sec.	120 A (sinusoidal)	120 A (sinusoidal)
Sampling rate	20 kHz	25,6 kHz
Mechanical properties		
Weight	approx. 3.4 kg	approx. 14.5 kg
Device dimensions in mm (L x W x H)	350 x 295 x 150	ca. 500 x 390 x 230
Protection class per EN 60529	Front: IP40; Back: IP20	Front: IP40; Back: IP20
Security		
Europe	CE labelling	CE labelling

03 Energy management

ProData® data logger Page 03/2

- Compact and universal data logger
- Acquisition of electrical and non electrical values
- Modbus Ethernet Gateway functionality enables simple integration of slave devices

Field bus modules series FBM Page 03/8

- Decentralised I/O field bus modules
- Connection with master devices via RS485 interface
- Seamless recording of various measurement and process data

ProData® DATA LOGGER

Ethernet

Modbus-Ethernet gateway

Memory 32 MB

Pulse inputs and
Pulse outputs

Thermistor input

Threshold value monitoring

Smart and compact:
Save energy costs through the universal data logger

- Basis for a comprehensive energy management system (ISO 50001)
- Mapping of all consumption and process data (current, water, gas, steam, pressure, etc.)
- Monitoring of switching statuses (e.g. circuit breaker, etc.)
- Analysis of energy consumption and operating hours
- Flexible integration in superordinate systems (Modbus-Ethernet gateway)
- Long-term storage of data with 32 MB onboard memory
- Saving of 24 differential monthly energy values as well as maximum power values - for each of the fifteen individual inputs on board
- Direct reading out and analysis of data via GridVis® software
- Free programming of 64 independent weekly timers
- Tariff conversion: Each digital input can be assigned a selected tariff from 1 to 8

Universal data logger for all consumption media

- 15 digital / pulse inputs
- 3 digital outputs, switchable via Modbus, weekly timer, threshold value and temperature monitoring
- Temperature measurement input
- Ethernet interface (Modbus TCP/IP, NTP ...)
- RS485 (Modbus RTU, slave, up to 115 kbps)
- 32 MB flash data memory
- Clock and battery function
- 64 weekly timers
- Threshold value monitoring
- Modbus-Ethernet gateway functionality
- Saving of minimum and maximum values (with time stamp)
- Configurable records, can be read out via RS485 and Ethernet

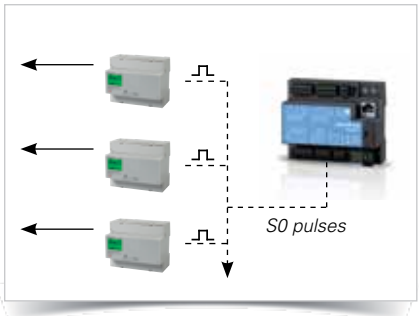

Fig.: Easy integration of existing meters

Applications

- EnMS per ISO 50001
- Integration of previously installed pulse counters in an EnMS
- Logging of non-electrical values
- Generation of performance indicators (key figures)
- Logging and monitoring of status messages
- Generation of alarms
- Ethernet-Modbus-Slave gateway

Fig.: Consolidation of diverse consumption media

Ethernet with gateway functionality

- Communication via Ethernet and Modbus RS485
- Simple integration in the LAN network
- Rapid and reliable data transfer
- Access to measurement data via various channels

Simple integration of existing meters

- Via Modbus-Ethernet Gateway integration and read-out of subordinate Modbus slave devices (e.g. electricity meters) possible with ease
- Conveniently capture measurements from all brands of meter with an S0 pulse output

Well thought-out to the last (vital) detail

- Internal clock generates precise data and time information for records and events
- Permanent operation of the clock thanks to integrated emergency battery
- Battery not permanently installed; as such convenient replacement possible

The ProData is the practical person's favourite

- Wide range power adapter (20 – 250 V AC, 20 – 300 V DC)
- Auto-Baud detection of the communication interface
- Screwable plug-in terminals
- Modbus address easily externally adjustable
- Rapid DIN rail installation

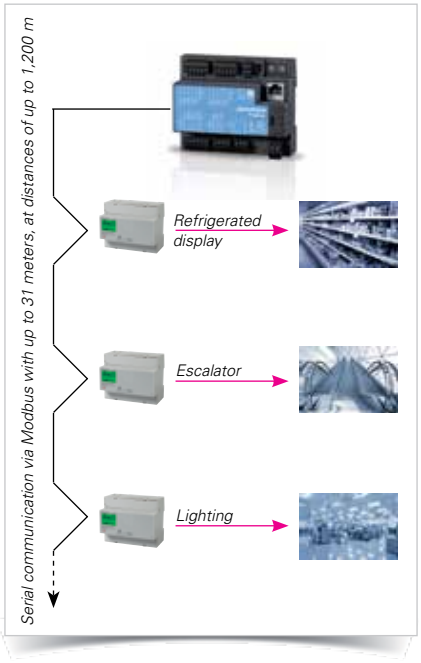

Fig.: Simple consolidation of Modbus meters

Fig.: Easy exchange of the battery during operation

Dimension diagrams

All dimensions in mm

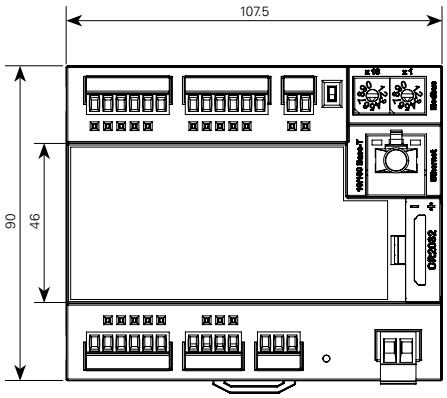

Front view

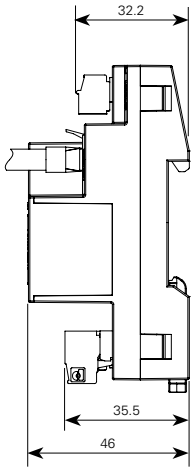

Side view

Typical connection

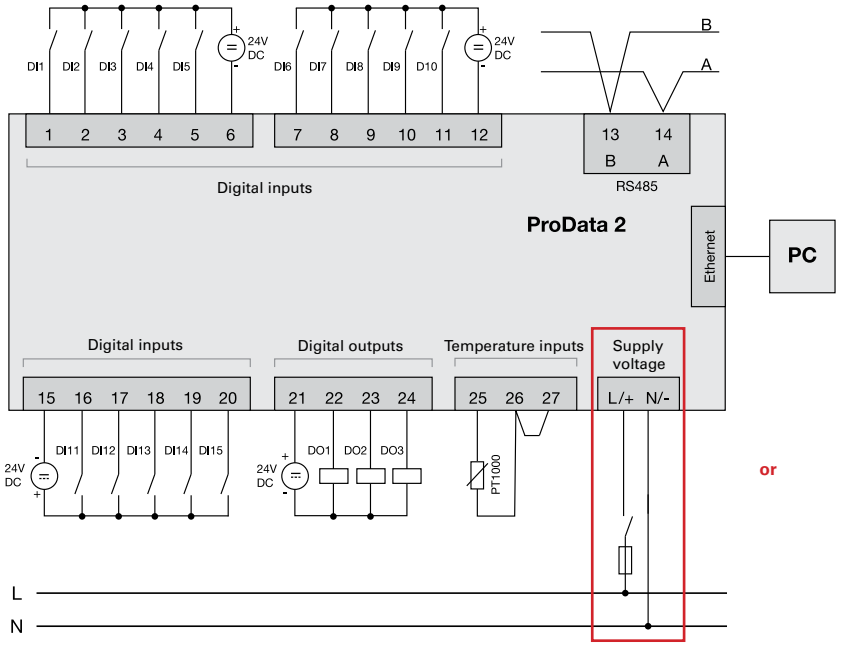

Connection example via
an external power supply

Device overview and technical data

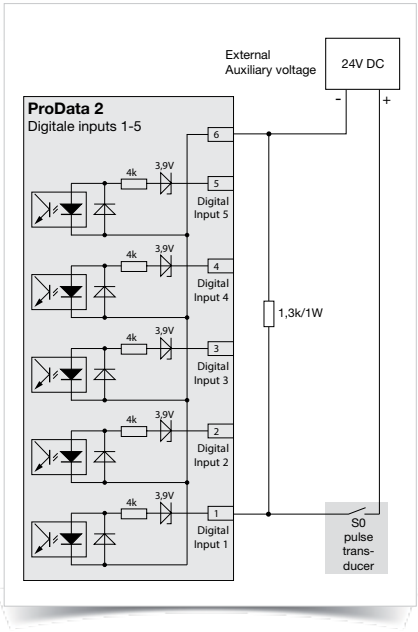

Fig.: S0 pulse input with external supply voltage and external plug-in resistor module*3

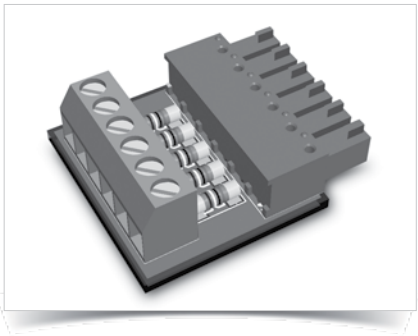

Fig.: S0 plug-in module (item no.: 52.24.111)

	ProData
Item number	**52.24.011**
Supply voltage	20 – 250 V AC or 20 – 300 V DC
Overvoltage category	300 V CAT II
Power consumption	max. 4 VA / 2 W

General	
Use in low voltage networks	•
Other measurements	
Operating hours measurement	•
Clock	•
Data logging	
Memory (Flash)	32 MB
Mean, minimum, maximum values	•
Alarm messages	•
Threshold value monitoring	•
Time stamp	•
Inputs / outputs	
Digital inputs	15
Digital outputs (as switch or pulse output)	3
Temperature measurement input	1
Password protection	•
Communication	
Interfaces	
RS485: 9.6 – 115.2 kbps	•
Ethernet 10/100 Base-TX (RJ-45 socket)	•
Protocols	
Modbus RTU, Modbus TCP	•
Modbus Gateway for Master-Slave configuration*1	•
NTP (time synchronisation)	•
DHCP	•
TCP/IP	•
ICMP (Ping)	•
Software GridVis®-Basic*2	
Online and historic graphs	•
Databases (Janitza DB, Derby DB); MySQL, MS SQL with higher GridVis® versions)	•
Manual reports (energy)	•
Topology views	•
Manual reading	•
Graph sets	•

Technical data	
Digital inputs and outputs	
Number of digital inputs	15
Supply voltage	20 – 30 V DC (SELV or PELV supply)
Pulse output (S0), maximum count frequency	25 Hz
Input signal present	> 18 V DC (typical 4 mA for 24 V)
Input signal not present	0 ... 5 V DC
Number of digital outputs	3
Supply voltage	20 – 30 V DC (SELV or PELV supply)
Switching voltage	max. 60 V DC
Switching current	max. 50 mAeff DC
Pulse output (energy pulse)	max. 20 Hz
Maximum line length	up to 30 m unscreened, from 30 m screened
Temperature measurement input	1
Update time	1 sec.
Suitable temperature sensor	PT100, PT1000, KTY83, KTY84
Total burden (sensor and cable)	max. 4 kOhm

Comment: For detailed technical information please refer to the operation manual and the Modbus address list.

• = included - = not included

*1 Use as a Modbus RTU slave is not possible in this mode. The ProData is only able to pass on requests to a Modbus slave device; it cannot request Modbus slave devices itself.

*2 Optional additional functions with the packages GridVis®-Professional, GridVis®-Enterprise and GridVis®-Service.

*3 External resistor S0 plug-in module for connection to an S0 pulse transducer required (item no.: 52.24.111)

Mechanical properties and others	
Weight	200 g
Device dimensions in mm (H x W x D)	90 x 107.5 x approx. 46
Battery	Lithium battery CR2032, 3 V (approval i.a.w. UL 1642)
Protection class per EN 60529	IP20
Assembly per IEC EN 60999-1 / DIN EN 50022	DIN rail mounting
Connection capacity of the terminals (digital inputs / outputs, temperature thermistor inputs) rigid / flexible Flexible with core end sheath without plastic sleeve Flexible with core end sheath with plastic sleeve	 0.2 to 1.5 mm² 0.2 to 1.5 mm² 0.2 to 1.5 mm²
Terminal connection capacity Serial interface Single core, multi-core, fine-stranded terminal pins, core end sheath	 0.2 to 1.5 mm² 0.2 to 1.5 mm²
Environmental conditions	
Temperature range	Operation: K55 (-40 ... +70 °C)
Relative humidity	Operation: 0 to 95 % RH
Operating altitude	0 ... 2,000 m above sea level
Pollution degree	2
Mounting position	any
Electromagnetic compatibility	
Electromagnetic compatibility of operating equipment	Directive 2004/108/EC
Electrical appliances for application within particular voltage limits	Directive 2006/95/EC
Equipment safety	
Safety requirements for electrical equipment for measurement, regulation, control and laboratory use – Part 1: General requirements	IEC/EN 61010-1
Particular requirements for Test and measurement current circuits	IEC/EN 61010-2-030
Noise immunity	
Class A: Industrial environment	IEC/EN 61326-1
Electrostatic discharge	IEC/EN 61000-4-2
Electromagnetic fields 80 – 1000 MHz	IEC/EN 61000-4-3, EMV-ILA V01-03
Electromagnetic fields 1000 – 2700 MHz	IEC/EN 61000-4-3, EMV-ILA V01-03
Rapid transients	IEC/EN 61000-4-4, EMV-ILA V01-03
Surge voltages	IEC/EN 61000-4-5, EMV-ILA V01-03
HF conducted interferences 0.15 – 80 MHz	IEC/EN 61000-4-6, EMV-ILA V01-03
Voltage dips, short term interruptions, voltage variations and frequency change	IEC/EN 61000-4-11, EMV-ILA V01-03
Emissions	
Class B: Residential environment	IEC/EN 61326-1
RFI Field Strength 30 – 1000 MHz	IEC/CISPR11/EN 55011
Radiated interference voltage 0.15 – 30 MHz	IEC/CISPR11/EN 55011
Radiated interference voltage 9 – 150 MHz	EMV-ILA V01-03
Safety	
Europe	CE labelling
USA and Canada	UL labelling
Firmware	
Firmware update	Update via GridVis® software. Firmware download (free of charge) from the website: http://www.janitza.com/downloads/

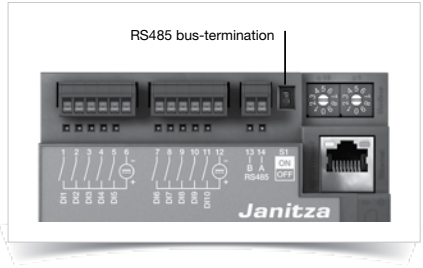

Fig.: Modbus / RS485 termination

Comment: For detailed technical information please refer to the operation manual and the Modbus address list.

• = included - = not included

FIELD BUS MODULES SERIES FBM

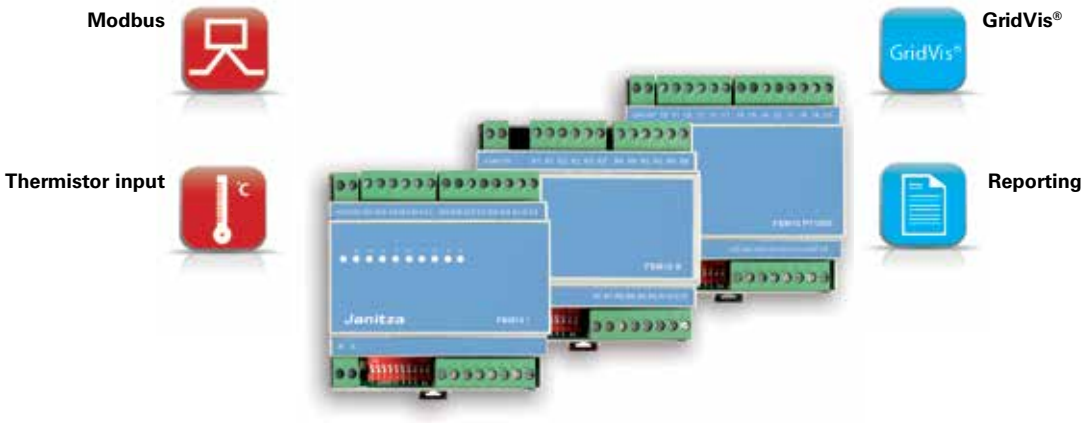

Decentralised I/O field bus module series FBM10

- RS485 interface
- Protocol Modbus RTU
- Can be used as a slave device to the measurement devices from series UMG 604-PRO, UMG 605-PRO, UMG 508, UMG 509-PRO, UMG 511 and UMG 512-PRO
- Also possible to connect over a distance of 1,000 m to the RS485 Modbus Master interface of the device; either via Profibus cable or e.g. a cable of type Li2YCY(TP) 2 x 2 x 0.22
- Modules are available pre-configured and programmed according to the selected measurement device

Use of the modules FBM10I and FBM10R

- Consolidation of various input and output signals in order to distribute to the respective participants
- Connection with the respective Modbus master from the device series UMG 604-PRO, UMG 605-PRO, UMG 508, UMG 509-PRO, UMG 511 or UMG 512-PRO is required in order to use the field bus modules.
- All data points are integrated into the Janitza system
- Detection of a wide range of key variables such as process data, states, error messages, threshold values, alarm outputs, etc.
- Archiving and visualisation via the software GridVis®

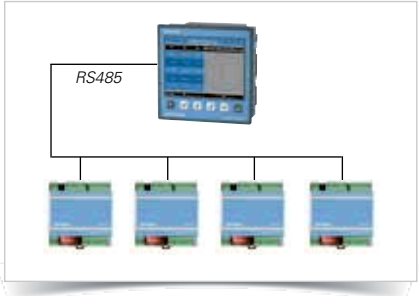

Fig.: Connection of the I/O field bus modules takes place via the RS485 interface of the UMG measurement device

Example of using the inputs

- Tariff conversion
- Synchronising measurement periods
- Error messages
- State measurements

Example of using the outputs

- Threshold value outputs for measured values

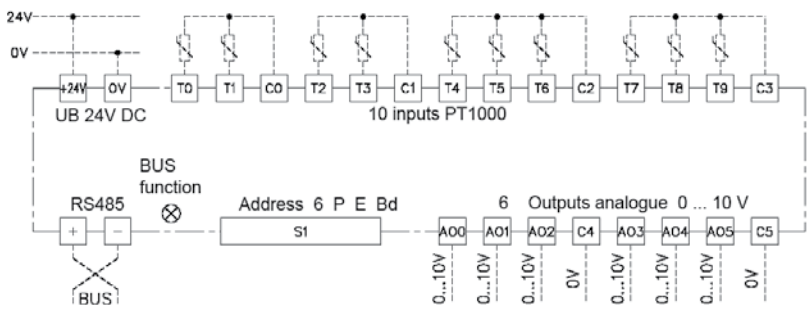

Fig.: Connection diagram FBM10 PT1000/PT100; thermistor input 2-wire

Use of the FBM10PT1000 module

- Temperature field bus module
- Logging of up to 10 temperature measurements (e.g. via PT100 or PT1000)
- The recording and visualisation of the measured values takes place with the aid of UMG 604-PRO, UMG 605-PRO, UMG 508, UMG 509-PRO, UMG 511 or UMG 512-PRO and the required expansion (see chapter 04 APPs – Expansion with know-how)

Fig.: Following the APP installation it is also possible to save the values.

Example

- Temperature monitoring
- Temperature logging

Field bus modules series FBM					
Type	**Relay outputs**	**Digital inputs*1**	**Analogue inputs*2**	**Thermistor inputs**	**Item no.**
FBM10I*3	–	10	–	–	**15.06.076**
FBM10PT1000*3	–	–	–	10	**15.06.077**
FBM10R-NC*3	10	–	–	–	**15.06.078**
FBM DI8-AI8*3	–	8	8	–	**15.06.079**

*1 Only state message
*2 4 – 20 m
*3 The modules are not suitable for the ProData in gateway operation.

General technical data	
Supply voltage	24 V DC ±20 %
No-load current	20 mA
Interface, protocol	RS485, Modbus-RTU
Transmission rate	4,800 to 38,400 Bit/s
Digital input	24 V DC, 5 mA
Relay outputs	24 V DC 0.5 A / 250 V / 3 A AC1 / 2 A AC3
Ambient temperature	-10 … +50 °C
Accuracy	<0.1 % for temperature measurement PT1000
EMC	per EN 55011
Terminal	plug-in terminals up to 1 mm²
Housing	45 mm installation row system 90 x 88 x 58 mm (H x W x D)
Installation	top-hat rail
Humidity	<95 % rel. humidity non-condensing
Protection class	IP20
Standards	CE conformity

04 Software and IT solutions

Janitza software and IT solutions Page 04/2
- UMG device homepage & APPs
- Energy-Portal
- GridVis® software

Grid visualisation software – GridVis® Page 04/4
- Software for energy and power quality monitoring systems
- Management of all measurement data, general electrical parameter / energy / power quality / RCM
- Programing and configuration of the measurement devices

Jasic® programming language (PLC functionality) Page 04/20
- Special programing / script language for various different UMG measurement devices
- Functions in the UMG device can be individually expanded
- Up to 7 user defined programs possible

APPs – expansions with know-how Page 04/24
- Expansions (APPs) for various different UMG measurement devices
- Functions integrated in the UMG device can be expanded, controlled and visualised via APPs
- Administration and installation via GridVis® software

Device homepage Page 04/35
- Power management and power quality analysis online
- Software installation not required
- Online data, historical data, graphs recording events and much more are directly available from the device homepage

Cloud solution for energy management – www.Energy-Portal.com Page 04/36
- Cloud solution especially designed for energy data
- Access from anywhere in the world via the PC or tablet under www.Energy-Portal.com
- Evaluating and displaying energy data from the UMG measurement devices

OPC UA server Page 04/40
- Increase the connectivity of the GridVis®
- Exchange all kinds of measuring values, KPIs and any kind of process parameters via OPC UA ITEMS (Tags)
- In addition to the direct GridVis® connection, the OPC UA server also offers KNX, SNMP as well as BACnet clients

Complete server with GridVis® software and database Page 04/42
- Powerful server as complete solution
- Pre-configured server guarantees immediate usability
- Simple integration into existing network

JANITZA SOFTWARE AND IT SOLUTIONS

Fig.: The device's own homepage

Fig.: Energy-Portal

Fig.: GridVis®-Software

Janitza software & IT solutions

UMG measurement devices – homepage & APPs
- Display the measured values via the device's own homepage
- Expansions (APPs) for various different UMG measurement devices

Energy portal
- Cloud solution for energy management
- No investment in software, databases and IT infrastructure required
- Simple summarization of all energy data from different locations

GridVis®-Basic
Free basic version:
- Maximum of five measuring devices
- Graphs and analysis tools
- Database (Jan-DB)
- Reports:
  – NEW starting with version 7.3*: Commissioning report
  – Energy and consumption reports
  – PQ reports (EN 50160, EN 61000-2-4 etc.)
  – Fault monitoring/RCM report

GridVis®-Professional
As GridVis®-Basic, but with the following additional features:
- Unlimited number of devices and data points
- Database driver (MSSQL, MySQL)
- Automation (readout, time setting, etc.)
- Virtual measuring devices and logic
- User administration

GridVis®-Service
As GridVis®-Professional, but with the following additional features:
- NEW starting with version 7.3* – Enhanced reports:
  – High availability
  – LET (Limits, Events, Transients)
  – Energy billing
- NEW starting with version 7.3*: COMTRADE & MSCONS Export
- Service, including REST API
- Online recorder
- Alarm management
- Measurement and consumption data export (CSV)
- Third party devices (generic Modbus)
- Enhanced automation: Reports, database actions, E-mail/alerting, cost centers and rate formation

GridVis®-Ultimate
As GridVis®-Service, but with the following additional features:
- Web interface GridVis®-Energy
- Enhanced user administration
- Dashboard and template manager
- Widgets
- Key performance indicator evaluation (KPI)
- Sankey diagram (energy flow analysis)
- Device overview with graph function
- NEW starting with version 7.3*: OPC UA Client
- NEW starting with version 7.3*: Image and symbol library

* Available as of July 2018

GridVis® –

Grid visualisation software

GridVis®

Three applications in a single software tool: energy management, power quality, ground fault monitoring (RCM)

GridVis® reveals potential energy savings. In addition, the measured parameters measured can be analyzed to detect possible production stoppages at an early stage and thus to optimize your operating equipment uptime. The scalable, user-friendly software is perfect for building standard-compliant energy, fault monitoring/RCM and power quality monitoring systems.

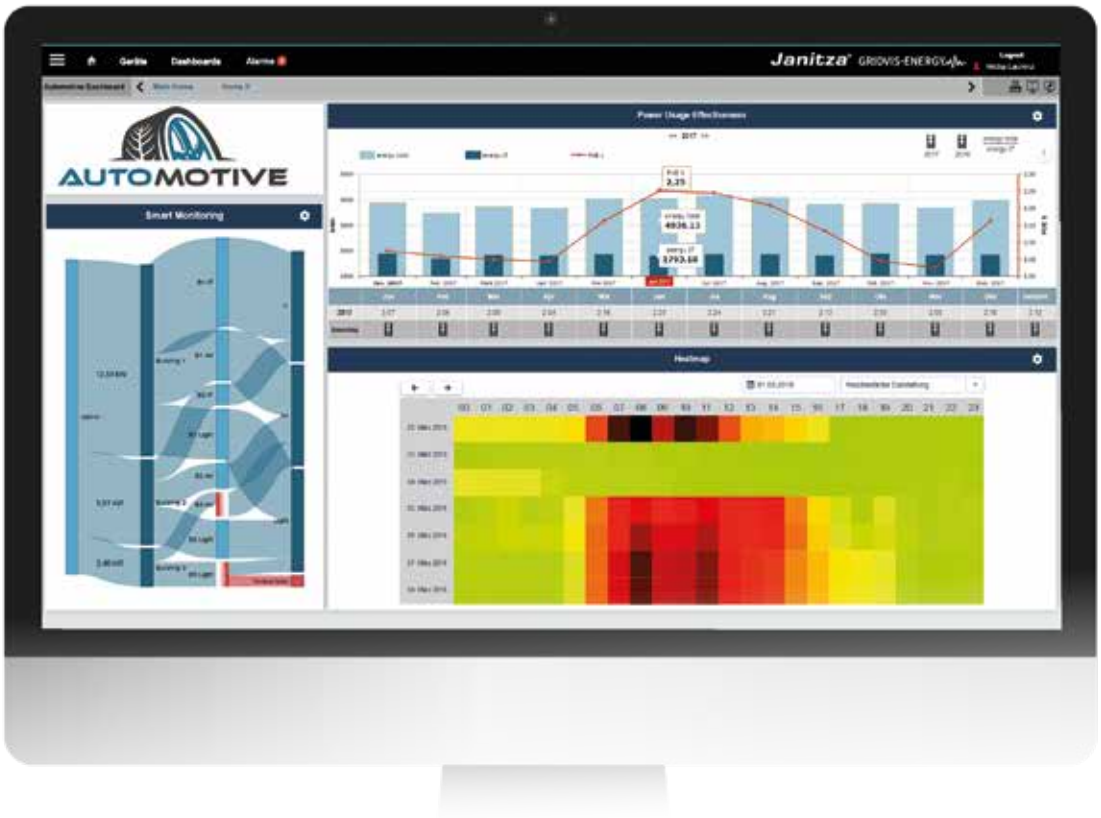

Energy management (EnMS)

Certified in accordance with ISO 50001. You are on the safe side with Janitza GridVis® when it comes to topics such as energy management.

Transparency

Keep track of consumption data and costs. Recognize cost generators as well as problems in the power quality. Discover rising fault currents and overloads. Define key performance figures from consumption and measurement data in line with the specifications of ISO 50006.

Network analysis & evaluation

Analyze and evaluate measurement data. The GridVis® software offers numerous functions, such as statistics, line diagrams, pie charts, heat maps, CBEMA curves, continuous lines, tables, Sankey diagrams, key performance indicators, etc. The functions can be designed intuitively. Measurement data can be analyzed as required by the user.

Safety & alarm management

Monitor limit values of measured variables, consumption data, residual currents as well as device communication. Reliable alerting via e-mail and the web interface. With Janitza's GridVis® measurement technology and network visualization software, you give your company more reliability and safety.

Visualization & documentation

Web visualization in line with your needs. Quickly and easily create your own dashboards and overview with a large selection of functions and graphics, without programming skills. Benefit from prepared reports and documentation on the topics of energy management, power quality and residual current monitoring.

Open system

Regardless of whether it's OPC UA, REST API or CSV, we offer many data import and export options as well as data access options. An open and future-proof system. Third- party devices can be easily integrated via OPC UA or Modbus. No other system offers more connectivity.

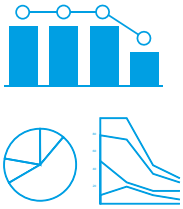

- FREE LAYOUT DESIGN
- APPLICATION-ORIENTED FUNCTIONS

Visualization

Design your own overviews with numerous functions and graphics

- Professional editor for the creation of dashboards
- Dashboards and templates: free design of overviews
- User management and regulation of access rights
- Numerous widgets and functions: line diagrams, bar charts and pie charts, heat maps, Sankey diagrams, key performance indicators (KPI), tables, indicators, continuous lines, weather, live values, links and much more.

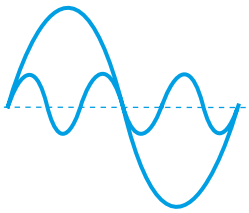

- PROFESSIONAL TOOLS FOR EVALUATING ALL MEASUREMENT AND CONSUMPTION DATA

Analysis & Evaluation

All details in an overview, with our tools for analyzing and evaluating your measurement data

- Result and transient browser
- Graph and graph set functions
- Statistical evaluations
- CBEMA curve
- Continuous line
- Dashboards & widgets
- Ground fault monitoring (RCM) analysis

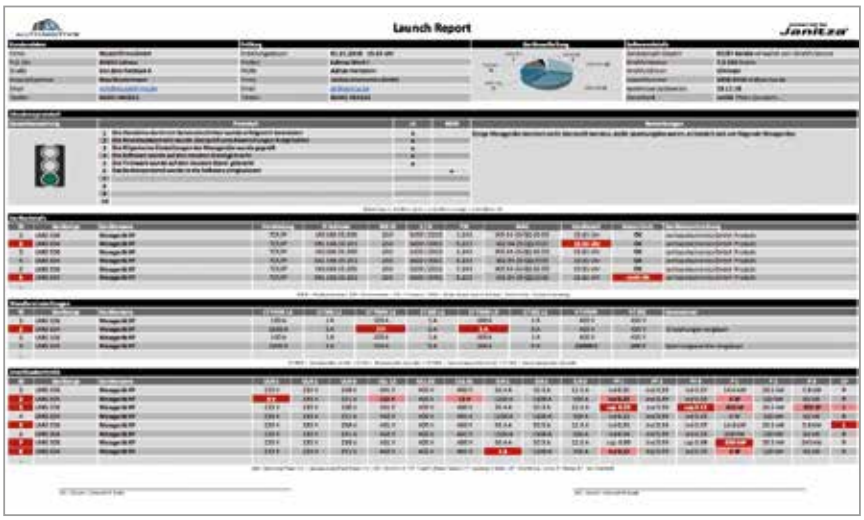

Fig.: GridVis® Launch-Report

Documentation

Reports optimized for EnMS, power quality and ground fault monitoring (RCM)

- EN 50160 & EN 61000-2-4 evaluation
- High availability analysis as well as statistical analyses
- Results, transients and limit-value violation
- Energy overviews
- Energy billing
- Residual current analysis
- System acceptance

- XLS- UND PDF-OUTPUT
- AUTOMATIC E-MAIL SENDING

Connectivity

Data access, data export and import made easy

- OPC UA client and server (optional)
- REST API (M2M solution)
- Modbus third-party devices
- CSV, XLS import & export
- GridVis® Collector (mobile data collector)
- MSCONS (Lastprofil und Zählerdaten)
- COMTRADE (transients and events)

- FUTURE-PROOF SOLUTIONS
- OPEN SYSTEM
- THE LATEST TECHNOLOGIES

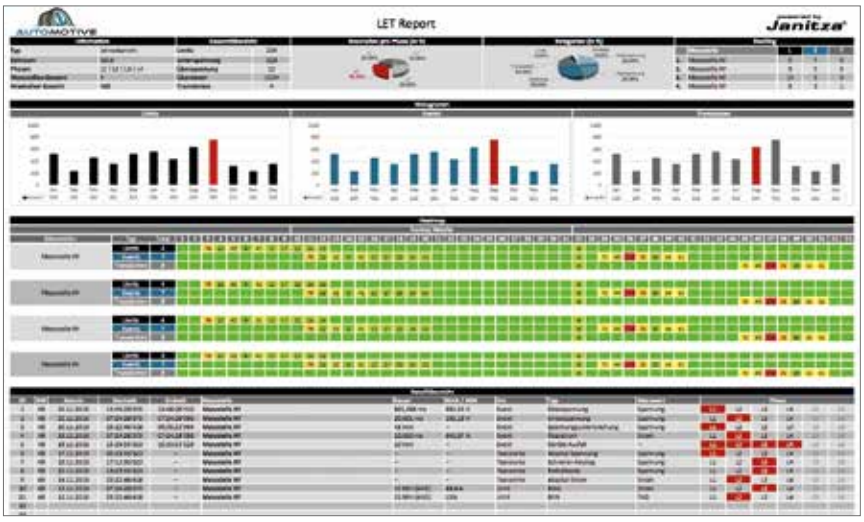

Fig.: GridVis® LET-Report

- HIGH AVAILABILITY
- RELIABILITY AND SAFETY THROUGH MONITORING
- MEASUREMENT TECHNOLOGY AND MEASURED VALUES UNDER CONTROL

Alerting

System and energy monitoring at the highest level

- Monitoring communication, limit values and much more
- Alerting via web UI, e-mail or external program
- Acknowledgement requirement with logging & history
- Escalation levels for needs-based alerting
- Full access to measurement data and communication parameters

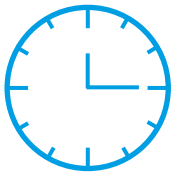

- TIME TASK MANAGEMENT
- EASY SYSTEM HANDLING THROUGH AUTOMATION FUNCTIONS

Automation

Plan the functions and automate your system

- Planning of device readouts, time synchronization, report creation or e-mail sending
- Automatic data import
- Database management with automation functions
- Shift schedules and rates

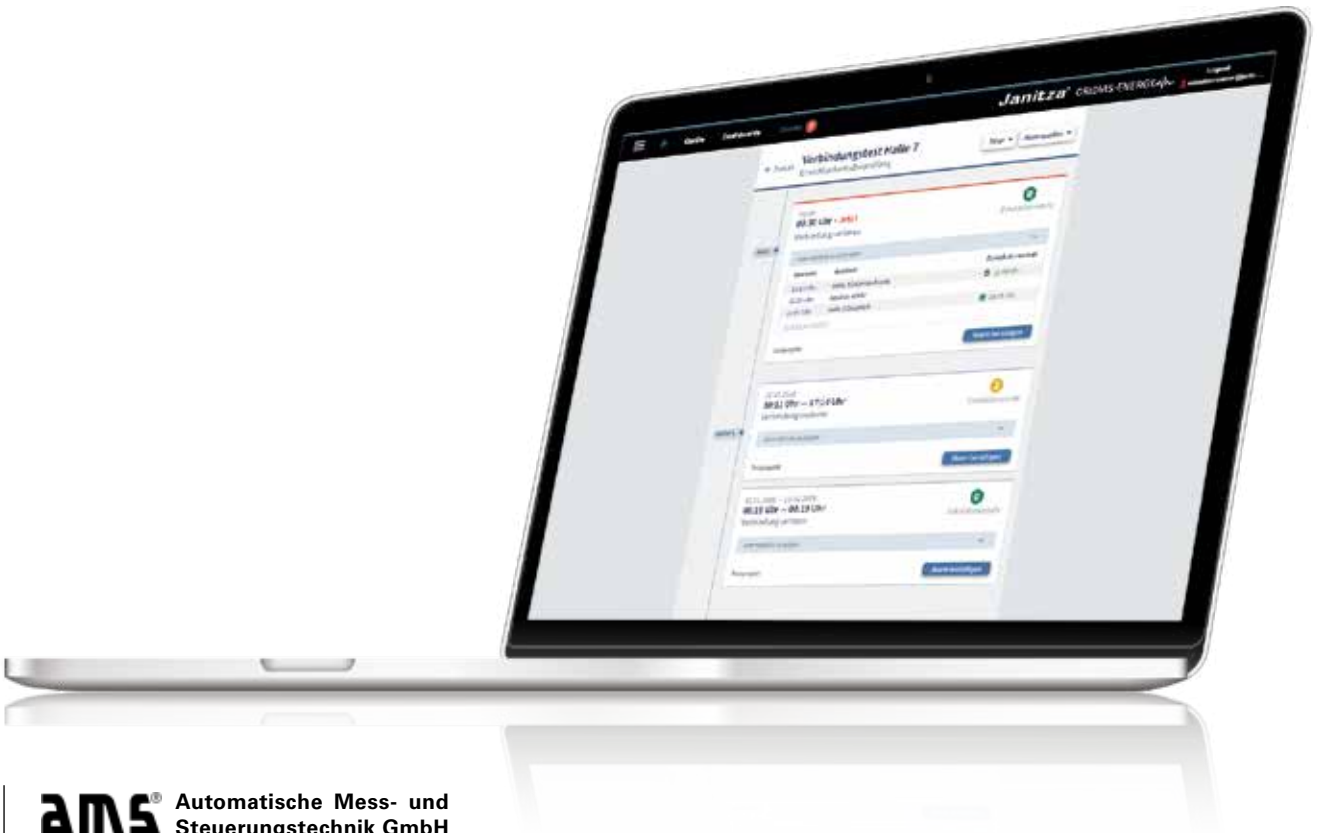

Web interface

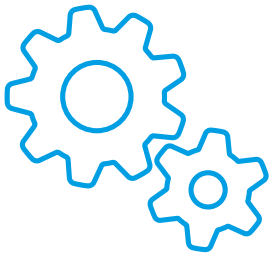

- Dashboards and widgets
- No local installation required

Engineering Tool

- Local installation
- Commissioning and parameterization of measuring devices
- Analysis and evaluation

Database

- Jan DB (database in the scope of delivery)
- MySQL (driver)
- MSSQL (driver)

Service

- Background process
- Operable without registered users

User administration & language

- Password protection and access control
- User management
- German, English, Spanish

Virtual measurement points & logic

- Measurement points without measuring device
- Mathematic operations

Data recording & device configuration

- Memory readout
- Online recorder
- Device parameterization

GridVis® editions – the right package of functions for every requirement profile

GridVis® – ULTIMATE 51.00.190

Like GridVis®– Service, plus:

- Web interface GridVis®-Energy
- Enhanced user administration
- Dashboard and template manager
- Widgets
- Key performance indicator evaluation (KPI)
- Sankey diagram (energy flow analysis)
- Device overview with graph function
- NEW starting with version 7.3*: OPC UA Client
- NEW starting with version 7.3*:
  Image and symbol library

GridVis®– SERVICE 51.00.180

Like GridVis®– Professional, plus:

- NEW starting with version 7.3*:
  Enhanced reports:
  – High availability
  – LET (Limits, Events, Transients)
  – Energy billing
- NEW starting with version 7.3*:
  COMTRADE & MSCONS Export
- Service, including REST API
- Online recorder
- Alarm management
- Measurement and consumption data export (CSV)
- Third party devices (generic Modbus)
- Enhanced automation:
  – Reports
  – Database actions
  – E-mail/alerting
  – Cost centers and rate formation

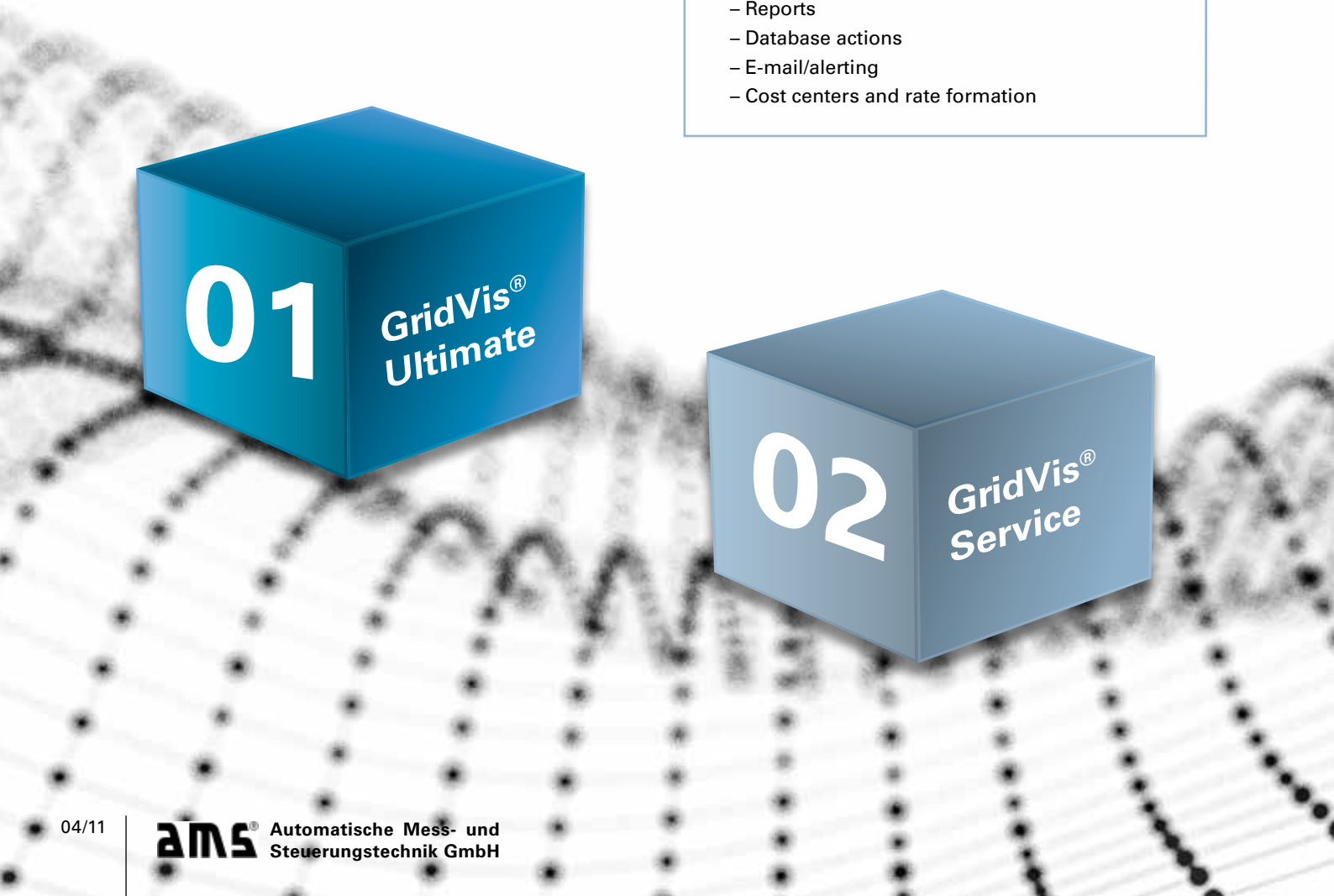

GridVis®– PROFESSIONAL 51.00.160

Like GridVis®– Basic, plus:

- Unlimited number of devices and data points
- Database driver (MSSQL, MySQL)
- Automation (readout, time setting, etc.)
- Virtual measuring devices and logic
- User administration

GridVis®– BASIC 51.00.116

Free basic version:

- Maximum of five measuring devices
- Graphs and analysis tools
- Database (Jan-DB)
- Reports:
  - NEW starting with version 7.3*:
    Commissioning report
  - Energy and consumption reports
  - PQ reports (EN 50160, EN 61000-2-4 etc.)
  - Fault monitoring / RCM report

* Available as of July 2018

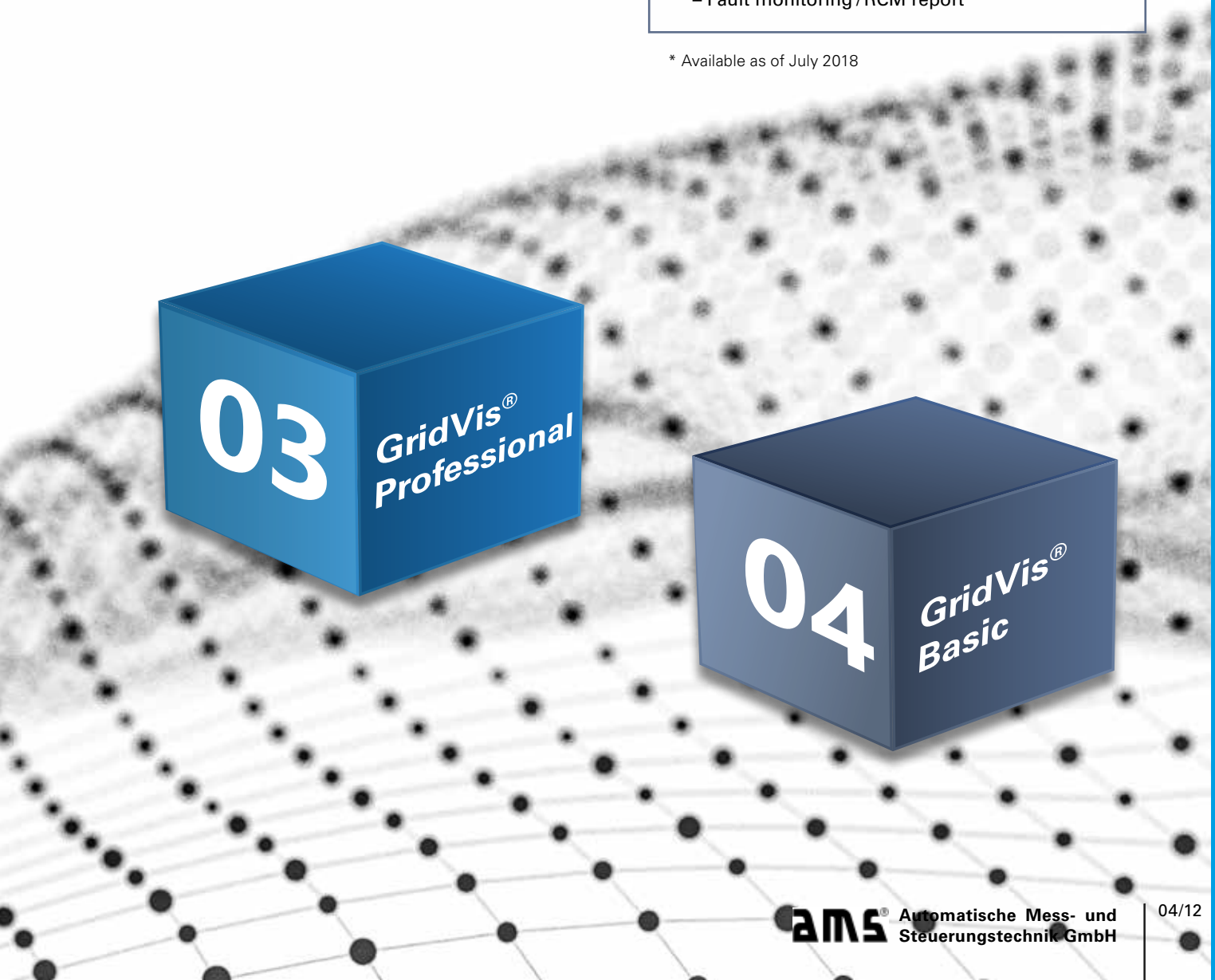

Rely on connectivity and a professional altering on the web

With GridVis® 7. 3, Janitza has expanded the powerful GridVis® to include many interesting functions. Add-on tools (e.g. the OPC UA server and GridVis® Collector), which are not included in the standard functions package, expand your options for data collection and processing.

Expanded functions of GridVis® 7.3:

Connectivity
- OPC UA client: fully integrate the OPC UA server in our system, use the values for mathematical operations, key performance indicators or record them with our online recorder.
- COMTRADE export
- MSCONS export

Alarm list in the WEB
- User-friendly and intuitive web interface
- Acknowledgment and history on the web
- Search and filter functions

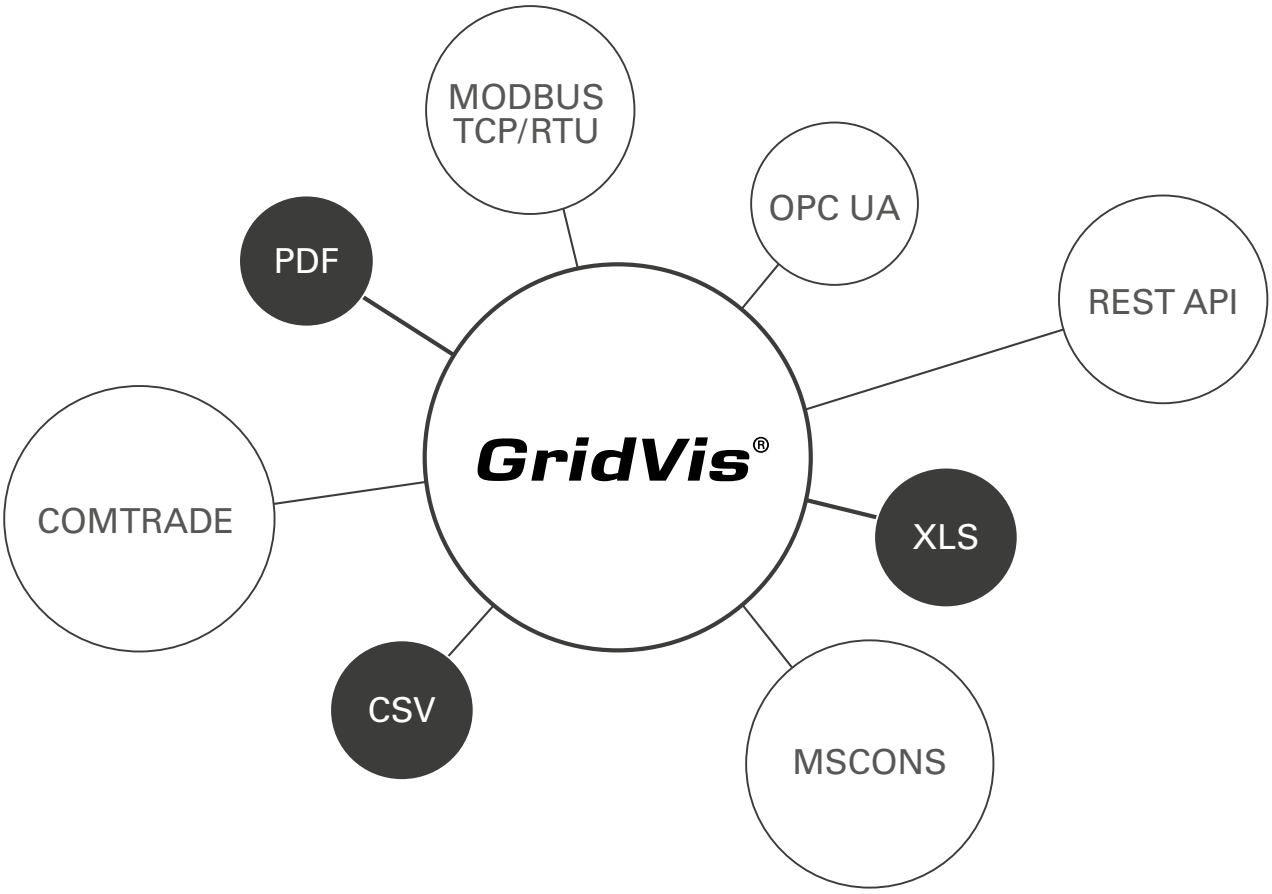

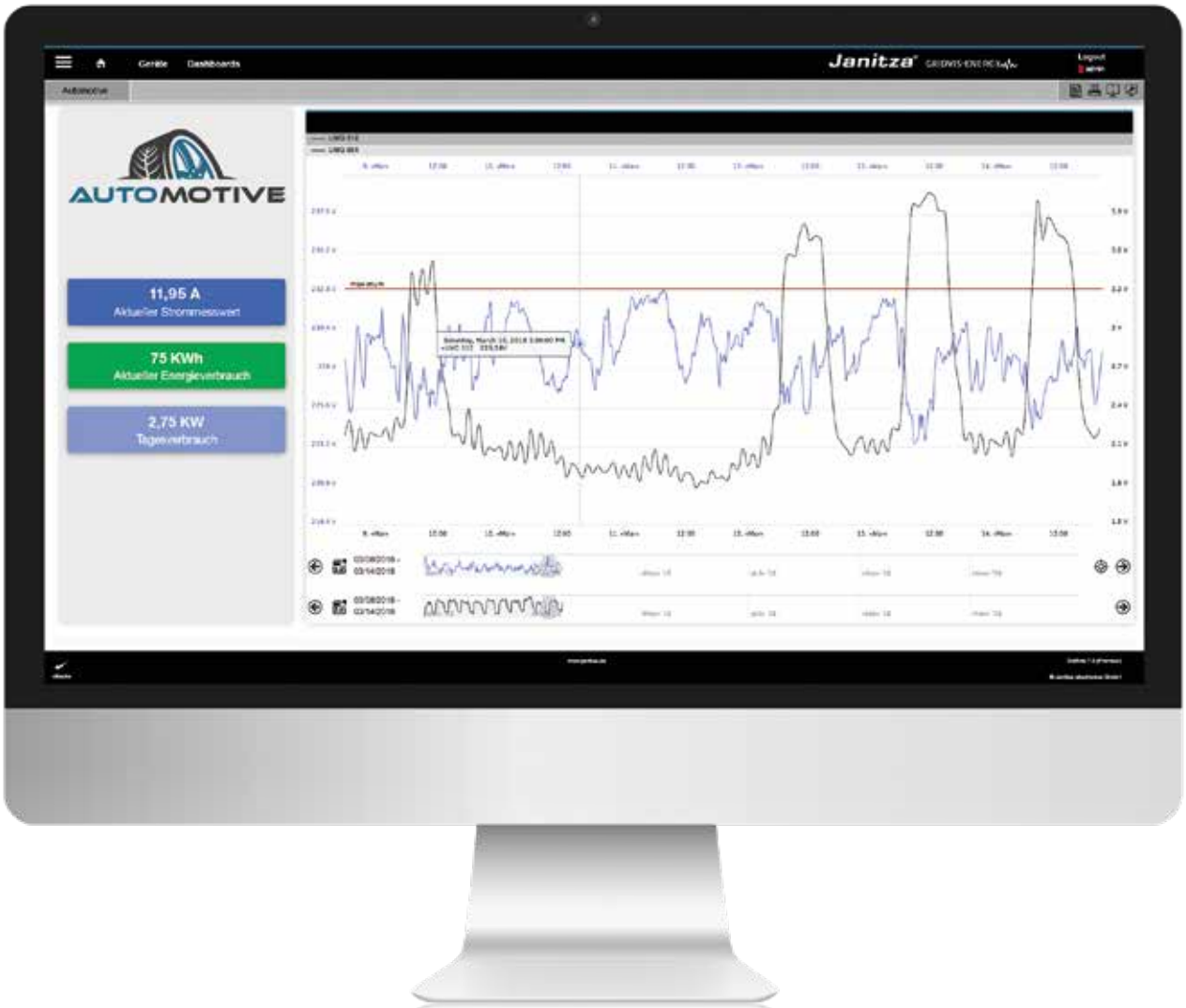

Enhanced reports
- High availability report – maximum system reliability with statistical evaluation
- LET report – events, transients, limit value violations
- Energy billing calculation – support of price groups, performance values and extra reactive energy, rates
- Commissioning report – acceptance protocol with connection check

Improved image management
- Pre-installed image and symbol library
- Grouping and search function

New line diagram
- Simple and intuitive configuration
- Dual time axis mode
- Limit value line
- Continuous line as a function
- Improved layout design

GridVis® Collector – mobile data readout

As a mobile unit, the GridVis® Collector makes it possible to read out measurement data from Janitza measurement devices on site without a communication connection. This data can be compared and evaluated in a project with other measurement points. With a battery runtime of up to 9 hours, the GridVis® Collector can manage up to 200 measuring devices. The handling is easy to understand and can be done by a qualified electrician in just a few easy steps.

The synchronization of measurement data with a locally installed GridVis® can be done via Ethernet or WLAN.

The GridVis® Collector offers the ideal solution for collecting measurement data in local network stations or other autonomous electrical distribution systems, which do not have a wireless or network connection.

GridVis® Collector
Item no. 51.00.400

The GridVis® Collector is not part of a GridVis® edition and can be purchased as an option.

OPC UA server – increase your connectivity

Increase the connectivity with the OPC UA server. In addition to the OPC UA client (part of the GridVis® Edition Ultimate), Janitza offers you an OPC UA server. With the OPC UA server, measured values, key performance indicators and other numerical values can be provided directly to an OPC UA client and processed further. In addition to the direct GridVis® connection, the OPC UA server also offers KNX, SNMP as well as BACnet clients.

The additionally installed server communicates directly with GridVis® and offers online values for all of the devices and functions incorporated in GridVis®. The OPC UA server is not a part of a GridVis® edition. It can be purchased as an option.

We would be happy to create an offer for you. The prices are based on the required data points.

OPC UA Server 250	item no. 51.00.151
OPC UA Server 1000	item no. 51.00.152
OPC UA Server 2500	item no. 51.00.153
OPC UA Server 10000	item no. 51.00.154

Services

Our support engineers as well as a network of professional solution partners offer you a large range of services. From installation or retrofitting, or the complete commissioning of the entire measurement system, to the power quality analysis by certified experts.

TRUST IN A STRON PARTNER

Extensive service
Benefit from custom in-house training workshops and seminars and a diverse range of training courses at our training center in Lahnau. Professional consultation and support services are free for GridVis® customers. We will provide you with on-site assistance during your commissioning and offer fair maintenance contracts to ensure optimal system availability. Customized adjustments to reports are possible.

You can rely on a partner with an extensive product portfolio and many years of experience. As a partner with experience and know-how in numerous industries, we can help you to integrate a perfect solution in your company.

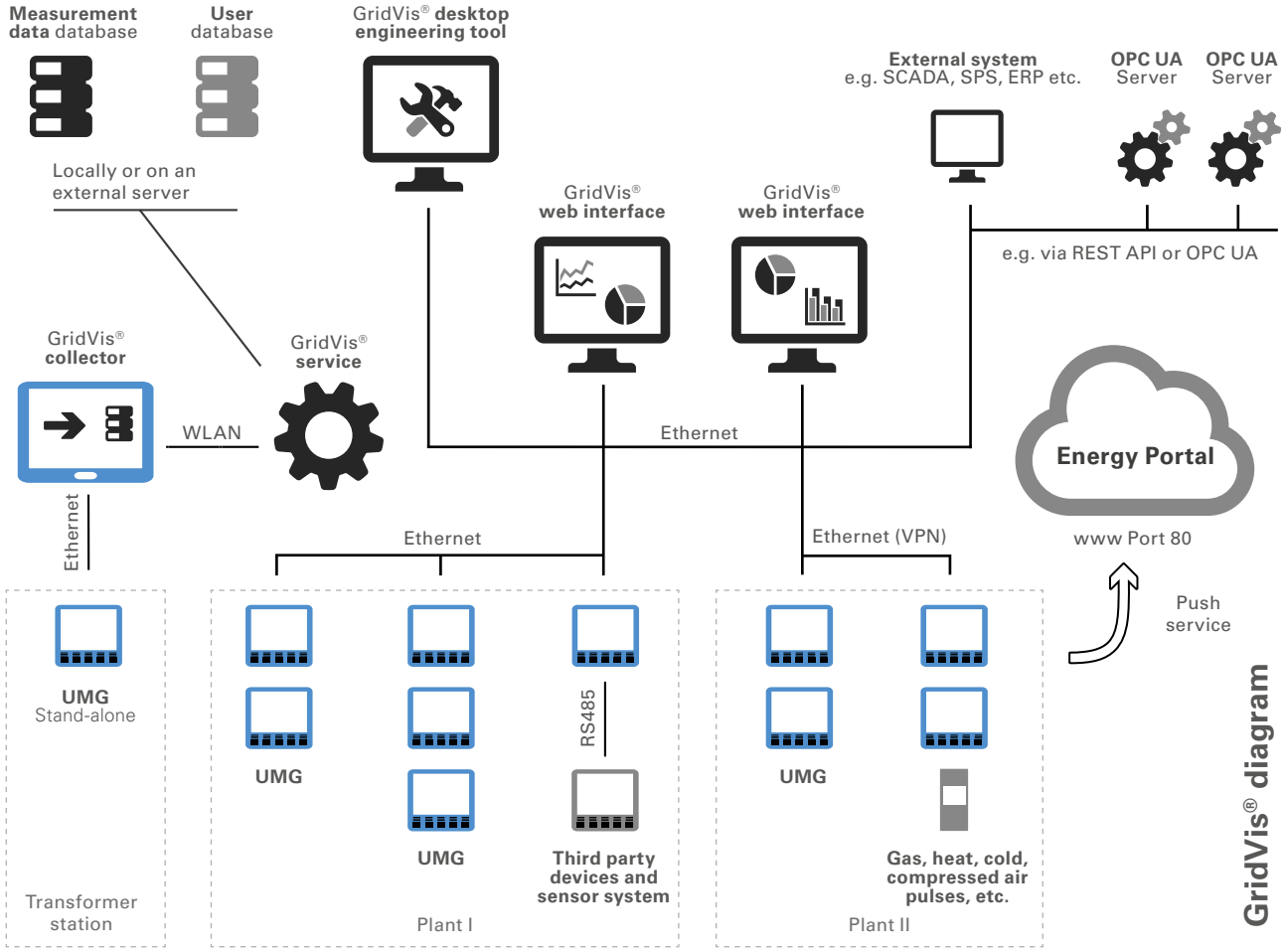
Measurement data database
User database
GridVis® desktop engineering tool
External system e.g. SCADA, SPS, ERP etc.
OPC UA Server
OPC UA Server
Locally or on an external server
GridVis® web interface
GridVis® web interface
e.g. via REST API or OPC UA
GridVis® collector
GridVis® service
WLAN
Ethernet
Energy Portal
Ethernet
Ethernet
Ethernet (VPN)
www Port 80
Push service
UMG Stand-alone
UMG
RS485
UMG
Third party devices and sensor system
UMG
Gas, heat, cold, compressed air pulses, etc.
Transformer station
Plant I
Plant II
GridVis® diagram

Overview of GridVis® editions

Attribute	Basic	Professional	Service	Ultimate
Installations (desktop)	1	3	5	5
Installations (service / virtual server)	0	0	2	2
Number of devices	5	Unlimited	Unlimited	Unlimited
Update period	Unlimited	1 year	1 year	1 year
Telephone support	Unlimited	Unlimited	Unlimited	Unlimited
Graphs	•	•	•*3	•*3
Data base Janitza DB / Derby DB	•	•	•	•
Manual reports	•	•	•*3	•*3
Graphical programming	•	•	•*3	•*3
Topology	•	•	•*3	•*3
Energy and consumption reports*2	•	•	•	•
Commissioning report*2	•	•	•	•
Data base support MS SQL / MySQL*1	-	•	•	•
Automatic read-out	-	•	•	•
Virtual device	-	•	•	•
User administration	-	•	•	•
Scheduling points in time	-	•	•	•
CSV data import	-	•	•	•
RCM report	-	•	•	•
Scheduling time periods	-	-	•	•
PQ reports	-	-	•	•
Automatic Excel export	-	-	•	•
Generic Modbus	-	-	•	•
Graphical programming module (read / write Modbus)	-	-	•*3	•*3
Automatic reports	-	-	•*3	•*3
Online logging	-	-	•	•
Service	-	-	•	•
Alarm management	-	-	•	•
REST-API	-	-	•	•
Energy billing report*2	-	-	•	•
LET report*2	-	-	•	•
High availability report*2	-	-	•	•
COMTRADE & MSCONS export*2	-	-	•	•
Image and symbol library*2	-	-	-	•
OPC UA Client*2	-	-	-	•
GridVis®-Energy web Visualisation	-	-	-	•
Item number	**51.00.116**	**51.00.160**	**51.00.180**	**51.00.190**
Item number for update extension (per year)	**-**	**51.00.161**	**51.00.181**	**51.00.191**
Item number for upgrade to next higher suite	**-**	**51.00.162**	**51.00.182**	**-**

*1 SQL database is not included in the scope of deliverables.
*2 New starting with version 7.3, available as of July 2018
*3 This feature is only available in conjunction with GridVis® installation on the desktop.

Number of devices: Max. number of simultaneously loaded devices (e.g. within the basic version: a project with 5 devices or 5 projects with one device).

Update period: Time period in which new versions can be installed free of charge.

Automatic read-out: Device read-out in accordance with freely configurable time plans.

Online logging: Measurement data from devices without memory will be averaged in the GridVis® software.

Service: The GridVis® software runs in the background and will be started automatically. Devices can be readout time-independent and automatically. For configuration and data processing the desktop installation is required.

Jasic® PROGRAMMING LANGUAGE

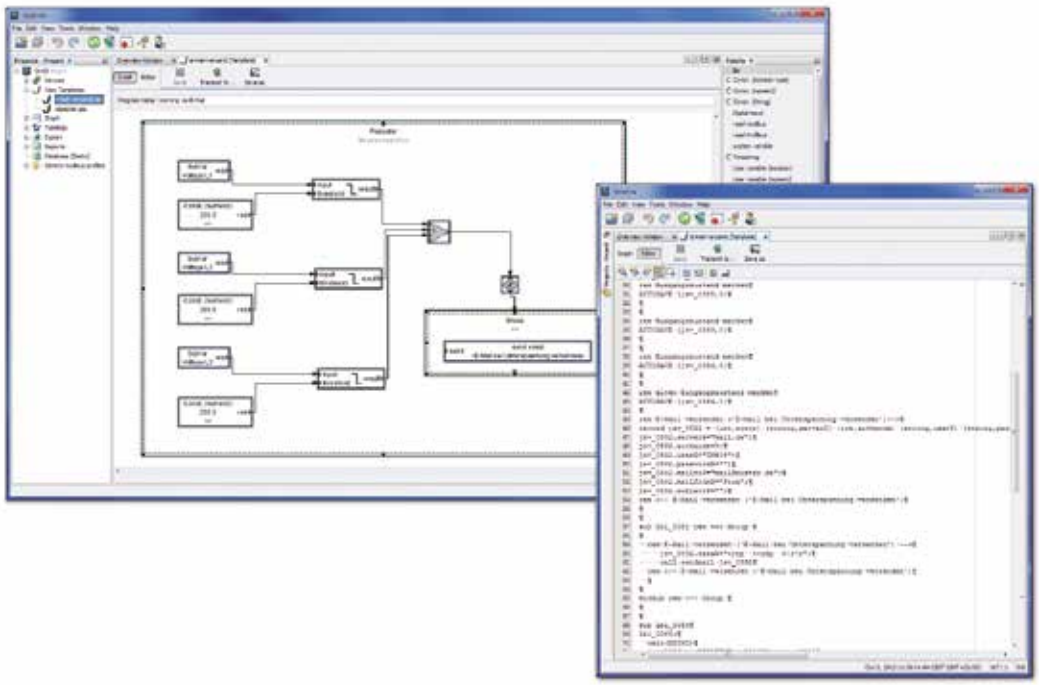

Manifold programming options

- Special programming / script language for the measurement devices UMG 604-PRO / UMG 605-PRO / UMG 508 / UMG 509-PRO / UMG 511 and UMG 512-PRO
- The user is no longer restricted to the functionalities integrated in the measurement device, but rather the device can be expanded to suit the individual's requirements
- Graphical programming supports the creation and configuration of mathematical functions and logical links
- The devices' own digital outputs can be set
- Digital inputs can be easily evaluated
- The processing and writing of registers belonging to external devices can be implemented via the Modbus
- Free configuration of threshold value infringements, timer functions or recording of special values can be implemented
- Programs created can be stored as files or transferred directly to the measurement device
- There are 7 memory spaces available, each with 128 kByte, for the saving of the programs
- Simultaneous operation of these 7 programs possible
- User-friendly, graphical programming
- Free programming of the Jasic® source code by the user

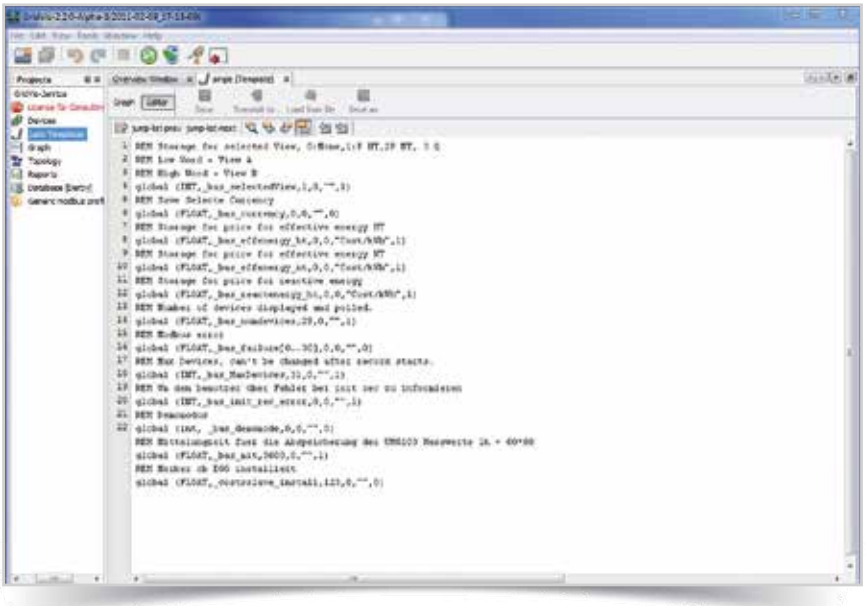

Fig.: Jasic® source code

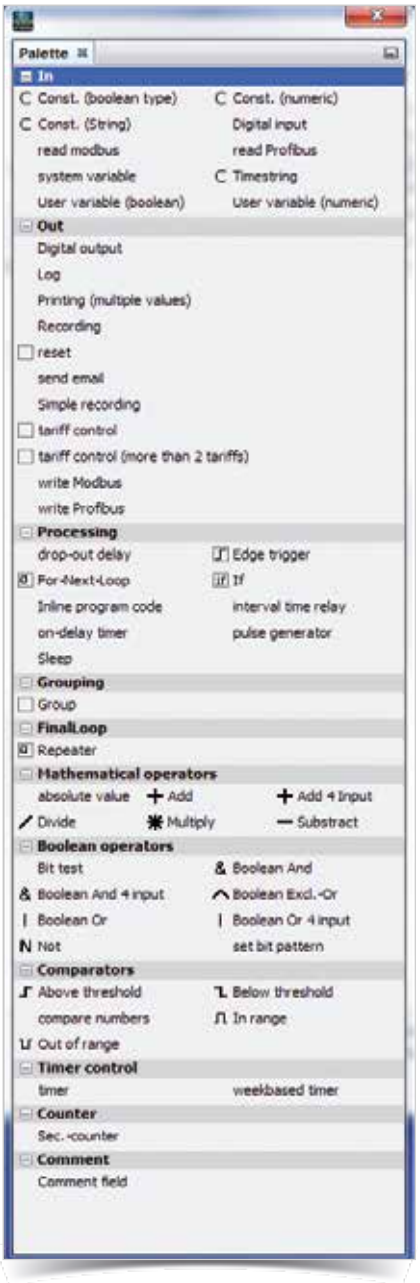

Graphical programming: Examples

Example of threshold value monitoring (comparator)

Example 1

- Monitoring of current L1: Determination of the threshold value by means of constants, lower level 2 A, upper level 100 A
- Digital output 1 signals the exceedance of the predefined values

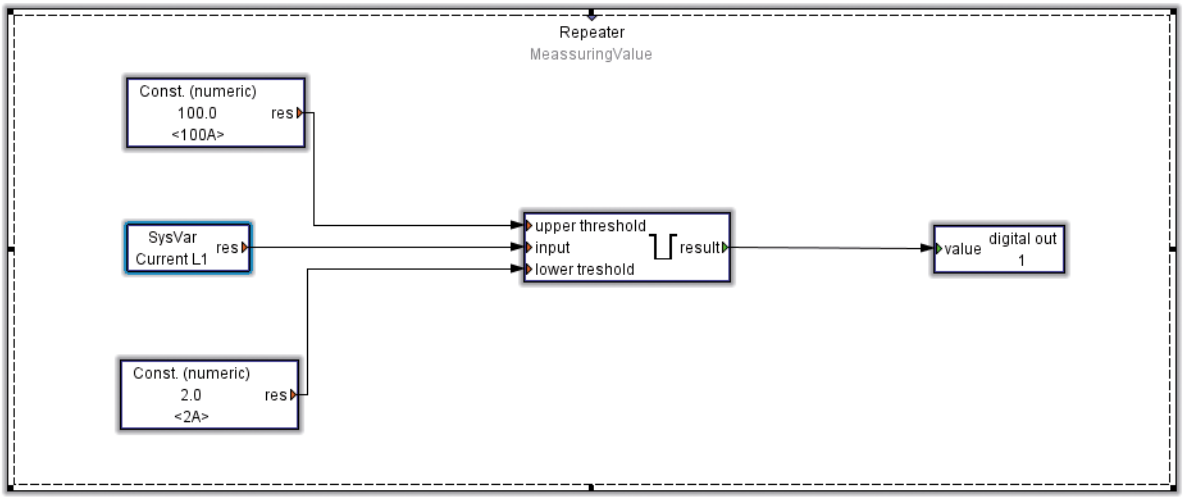

Example 2

- Works with only one lower threshold (in this case 100 A)
- In the event of the current dropping below 100 A, digital output 2 will be activated

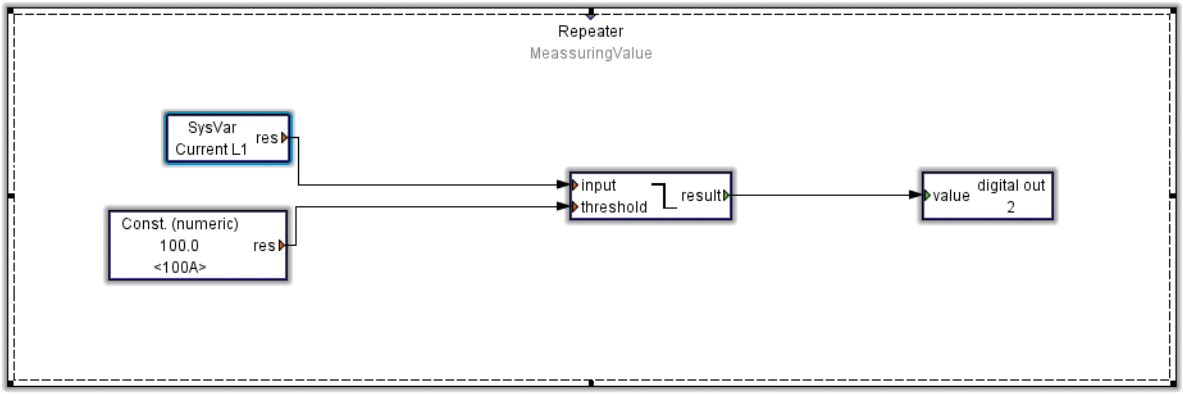

Example 3

- An email will be sent in the event of the value dropping below the predefined setting
- In this example the email will be sent with an under-voltage of < 200 V in phases L1, L2 or L3
- Additional information: Voltage values from the 3 phases at the time of the undervoltage

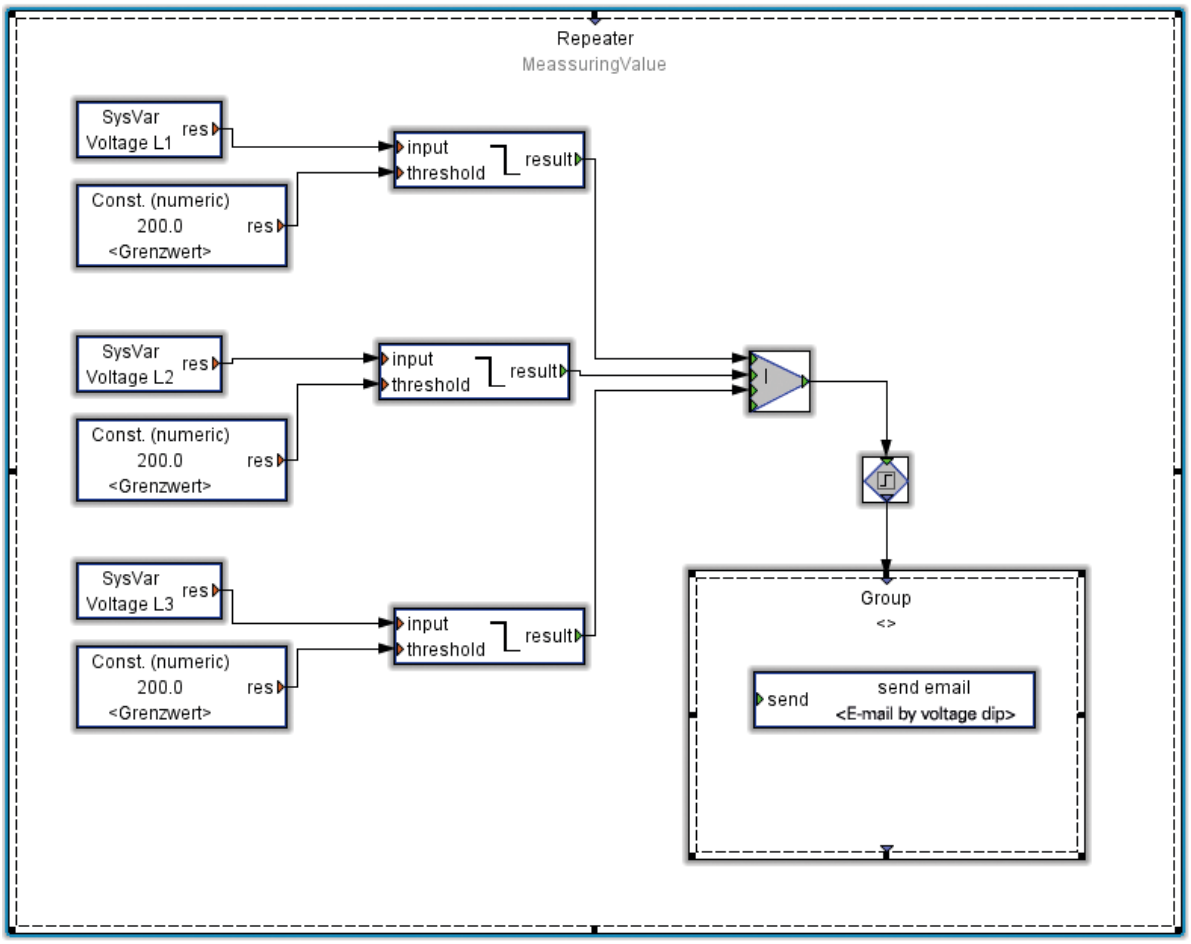

APPs –

expansions with know-how

Software based expansions for the measurement devices

- Functions integrated in the UMG device can be expanded, controlled and visualised via APPs
- Depending on the application, consisting of several Jasic®, Flash and homepage files (administration and installation implemented via GridVis® software)
- The programming language for creating APPs is Jasic®
- Alternatively, the programming can also be implemented graphically with the GridVis®
- Development of further APPs for the measurement devices by the user and third parties possible
- The creation of APPs requires programming knowledge of Jasic®, JAVA Script, JSON, AJAX or Action Script depending on the application

Overview of product variants		
Description	Suitable for	Item number
Alert Messenger[*6] Configurable Jasic® program for sending fault messages by email	UMG 604 / UMG 605 / UMG 508 / UMG 509 / UMG 511 / UMG 512 and PRO series	**51.00.209**
EN50160 Watchdog[*6] Integrated "Watchdog"-function for continuous monitoring per EN 50160	UMG 605 / UMG 512	**51.00.264**
Emax peak load optimization[*7] The APP includes peak load shedding programs for the maximum monitor function (EMAX). Up to 64 switch-off stages can be implemented (depending on the hardware). The configuration and monitoring is implemented via the device's website. The shedding operations can be carried out via FBM modules (available as options), PROFIBUS or Modbus. The APP requires Emax to be enabled (subject to purchase) on the device!	UMG 604-PRO / UMG 605-PRO / UMG 508 und UMG 511	**51.00.235**
Emax enabling		**52.16.080**
FBM10PT1000[*2] Up to 10 additional thermistor inputs can be implemented via the RS485 interface by means of hardware expansion	UMG 604 / UMG 605 / UMG 508 / UMG 509 / UMG 511 / UMG 512 and PRO series	**51.00.211**
GPS Sync Synchronization of the device time via digital input. For usage of the APP the GPS receiver, item no.15.06.240, is required	UMG 604 / UMG 605 / UMG 508 / UMG 509 / UMG 511 and PRO series	**51.00.291**
Humidity & Temperature JFTF-I[*3] Processing and recording of up to 8 temperature / moisture sensors possible	UMG 604 / UMG 605 / UMG 508 / UMG 509 / UMG 511 / UMG 512 and PRO series	**15.06.337**
IEC61000-2-4 Watchdog[*6] Integrated "Watchdog"-function for continuous monitoring per IEC 61000-2-4	UMG 605 / UMG 512	**51.00.265**
IEC61000-2-4 Watchdog Light[*6] Integrated "Watchdog"-function for continuous monitoring per IEC 61000-2-4	UMG 604 / UMG 509	**51.00.309**
Measurement monitor[*4] [*6] Display of current and historical measured values in the form of diagrams on the device's own homepage	UMG 96RM-E	**51.00.246**
APP Mini EnMS[*6] Display of current and historical measured values in numbers and diagrams from a master device and max. 15 UMGs without memory, on the device's own homepage	UMG 604 / UMG 605 / UMG 508 /UMG 509 / UMG 511 / UMG 512 und PRO-Serie	**51.00.266**
Multitouch[*1] Reading out of 30 measured values and max. 31 slave devices via RS485	UMG 604 / UMG 605 / UMG 508 / UMG 509 / UMG 511 / UMG 512 and PRO series	**51.00.207**
Push Service[*5] [*6] Sending data directly from the measurement device to a server without any additional software with 10 slave devices	UMG 604 / UMG 605 / UMG 508 / UMG 509 / UMG 511 / UMG 512	**51.00.238**
Push Service + UMG 20CM[*5] [*6] Sending data directly from the measurement device to a server without any additional software For UMG 20CM queries over: UMG 604 / UMG 605 / UMG 508 / UMG 509 / UMG 511 / UMG 512 and PRO series	UMG 604 / UMG 605 / UMG 508 / UMG 509 / UMG 511 / UMG 512 and PRO series	**51.00.285**
SNMP Threshold monitoring with alarm function (SNMP-Trap)	UMG 604 / UMG 605 / UMG 508 / UMG 509 / UMG 511 / UMG 512 and PRO series	**51.00.310**

[*1] Also needed for BACnet, if slave devices have to be visualized via RS485.
[*2] Free APP for item-no. 15.06.077.
[*3] Free APP for item-no. 15.06.074.
[*4] No APP installation; device activation required
[*5] The APP Push Service is integrated in the firmware of the measuring device UMG 96RM-EL (unencrypted).
[*6] Serial number is needed
[*7] Only in conjunction with commissioning and Emax enabling (article no: 52.16.080)

APP Fault message **Item no. 51.00.209**

- Configurable Jasic® program for sending fault messages by email
- Depending on configuration, sending of fault messages with the following events: Total harmonic distortion voltage exceeded, short-term interruption detected, transient detected
- Saving the meter readings for the event and transient messages in the Modbus register
- Option to monitor additional measured values via an interface (not included)
- Emails*[1] with consumption values for day, week and month can be sent (a non-encrypted mail server is required)
- Serial number is needed

Suitable for: UMG 604 / UMG 605 / UMG 508 / UMG 509 / UMG 511 / UMG 512 and PRO series

APP FBM10 PT1000 **Item no. 51.00.211**

- Up to 10 additional thermistor inputs can be implemented via the RS485 interface
- Hardware expansion FBM10 PT1000 – a DIN rail module with 10 PT1000 inputs – necessary for this APP

Suitable for: UMG 604 / UMG 605 / UMG 508 / UMG 509 / UMG 511 / UMG 512 and PRO series

Fig.: Measured value display via the devices' homepage

APP Humidity & Temperature JFTF-I **Item no. 15.06.337**

- Can process and record the measured values from up to 8 temperature/ moisture sensors (item no. 15.06.074)
- In doing so the display of the measured values is implemented via a homepage after installing the APP, or via global variables in the GridVis®
- Measured values can be saved in a second Jasic® program via the graphical programming
- Delivers two analogue 4 – 20 mA output signals, which will be processed by the function module FBM DI8AI8 (item no. 15.06.079)

Suitable for: UMG 604 / UMG 605 / UMG 508 / UMG 509 / UMG 511 / UMG 512 and PRO series

Fig.: Humidity / temperature sensor JFTF -I

APP EN 50160 Watchdog

Item no. 51.00.264 & 51.00.305

Integrated “Watchdog” function for continuous monitoring of the power quality per EN 50160. The power quality on the supply side should comply with EN 50160. This standard describes various power quality parameters for the distribution of electrical power on public power grids. EN 50160 pertains to mains voltage, i.e. the voltage measured at the mains connection point. With power quality monitoring per EN 50160, all the algorithms (including for 95% and 100% values) are integrated in the measurement device itself.
The auxiliary voltage of the device should be buffered to ensure that power failures can be reliably detected as events.

- Integrated watchdog function
- No need to transmit large volumes of measured data from the measurement device to a host system
- Save on communications costs for applications with remote consumers
- Simple analysis possible thanks to integrated colour display based on a “traffic light” system
- Possible to perform power quality analyses even with no particular knowledge on the topic
- No alarm functionality
- Serial number is needed

Item no. 51.00.264 suitable for: UMG 605 and UMG 512
Item no. 51.00.305 suitable for: UMG605-PRO and UMG 512-PRO

Fig.: APP Power Quality Report based on the EN 50160

APP IEC 61000-2-4 Watchdog

Item no. 51.00.265 / 51.00.306 / 51.00.309 / 51.00.308

Integrated “Watchdog” function for continuous monitoring of the power quality per IEC 61000-2-4. The standard IEC 61000-2-4 defines numerical limits for industrial and private power distribution systems at rated voltages up to 35 kV. For the consumer, the standard IEC 61000-2-4 should be applied with reference to power quality. Therefore the power quality in all technical systems must be continuously monitored in accordance with IEC 61000-2-4, in order to ensure fault-free operation of the installed system.
The auxiliary voltage of the device should be buffered to ensure that power failures can be reliably detected as events.

- Integrated watchdog function accordance with standard IEC 61000-2-4
- No need to transmit large volumes of measured data from the measurement device to a host system
- Save on communications costs for applications with remote consumers
- Simple analysis possible thanks to integrated colour display based on a “traffic light” system
- Possible to perform power quality analyses even with no particular knowledge on the topic
- No alarm functionality
- Serial number is needed

Item no. 51.00.265 suitable for: UMG 605 and UMG 512
Item no. 51.00.306 suitable for: UMG 605-PRO and UMG 512-PRO
Item no. 51.00.309 suitable for: UMG 604 and UMG 509
Item no. 51.00.308 suitable for: UMG 604-PRO and UMG 509-PRO

Fig.: APP Power Quality Analyse acc. to IEC 61000-2-4

APP Measurement monitor **Item no. 51.00.246**

The “Measured value monitor” APP allows you to display current and historical measured values, in the form of diagrams, on the homepage of a Janitza UMG device. User-friendly controls mean you can create diagrams quickly and easily.

- Fully web-based, you only need a web browser
- Can be run on desktops, laptops, tablets etc.
- Access the most important current and historical measured values
- Easy operation with drag & drop
- Up to 6 measured values in a diagram (2 Y-axes)
- Up to 60,000 data points in a diagram (10,000 per measured value)
- Serial number is needed

Suitable for: UMG 96RM-E

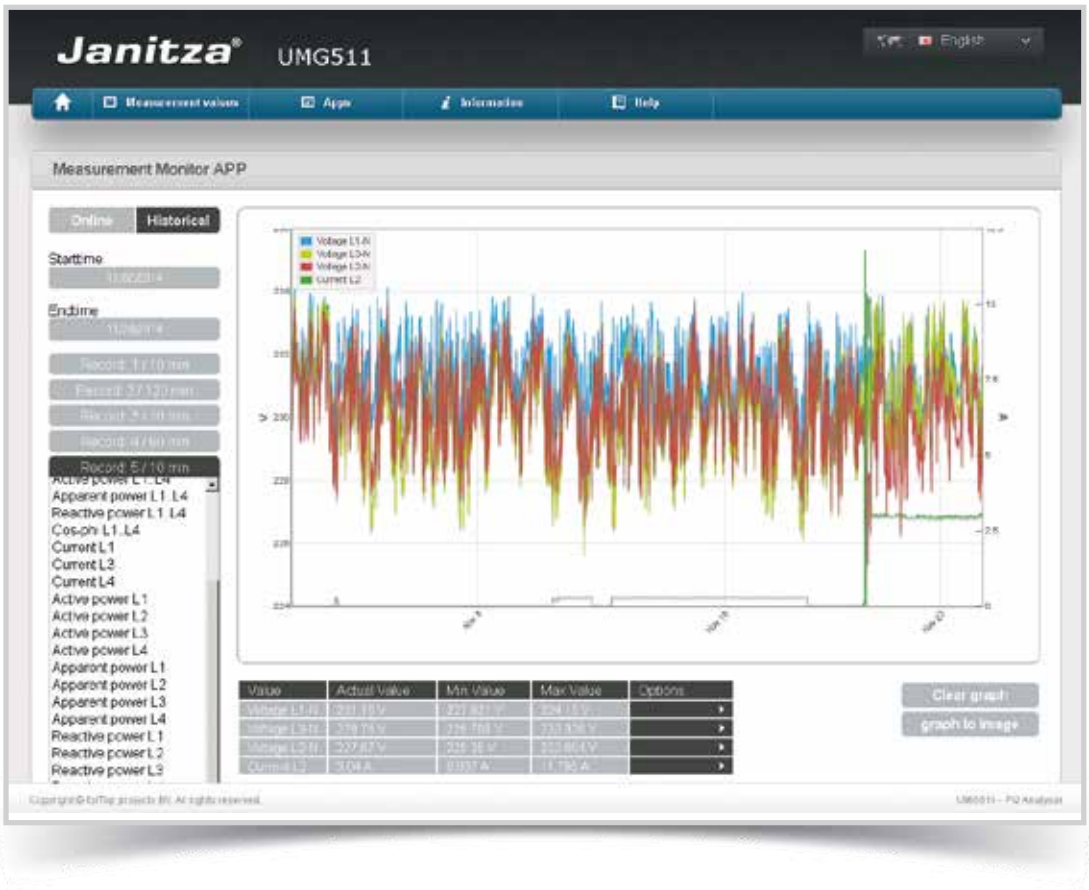

Fig.: APP Measurement monitor

APP Multitouch **Item no. 51.00.207 & 51.00.293**

- Reads out 30 measured values (fixed default value) from up to 31 slave devices (configurable) via RS485
- Filing of the measured values in the master in global variables or on BACnet data points
- Display of the measured values is implemented via the JPC35 touch panel or via the device homepage (browser with FLASH plug-in necessary)
- Expansion for live value display
- Integrated BACnet gateway function (option, item no. 52.16.083)
- The BACnet-ID can be changed via the homepage
- Program installs a control program
- Possible communications fault (RS485-Bus) directly visible via a status display
- The number of devices and device descriptions can be configured via the master devices homepage
- The master device is automatically recognised and entered in the "Device type" field
- The BACnet configuration is likewise implemented via the master device homepage
- Each device can be assigned its own BACnet-ID
- EDE file for the import of the BACnet data points in a BACnet-GLT is included in the scope of deliverables for the APP

Item no. 51.00.207 suitable for: UMG 604 / UMG 605 / UMG 508 / UMG 509 / UMG 511 / UMG 512 and PRO series
Item no. 51.00.293 suitable for UMG 20CM queries via: UMG 604 / UMG 605 / UMG 508 / UMG 509 / UMG 511 / UMG 512 and PRO series

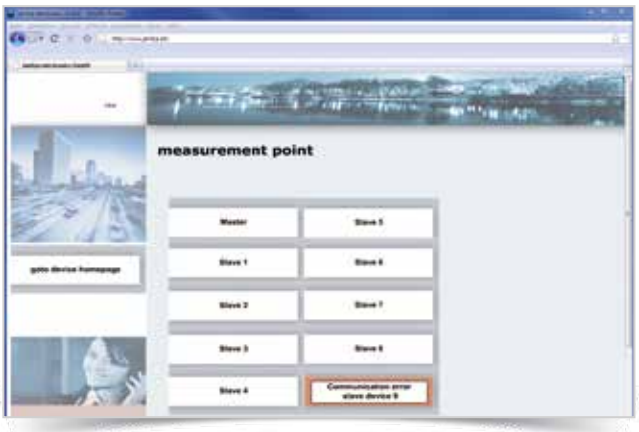

Fig.: Multitouch APP: Slave measurement devices overview on the master device homepage, e.g. up to 31 UMG Modbus slaves can be displayed via a UMG 604-PRO master device

Fig.: Display of measured values for an individual slave device

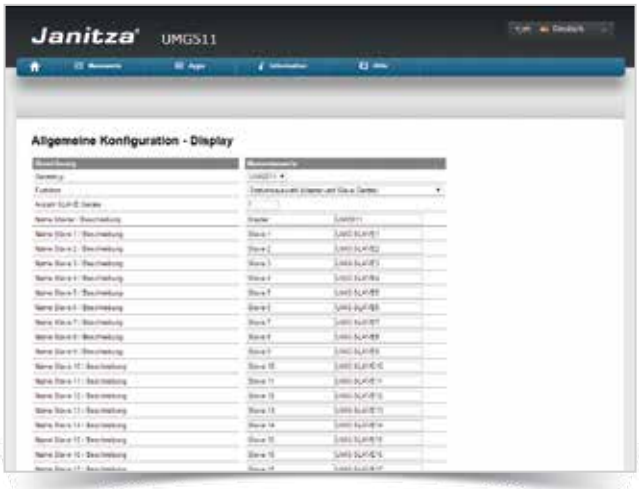

Fig.: General configuration of the monitoring master/slave devices

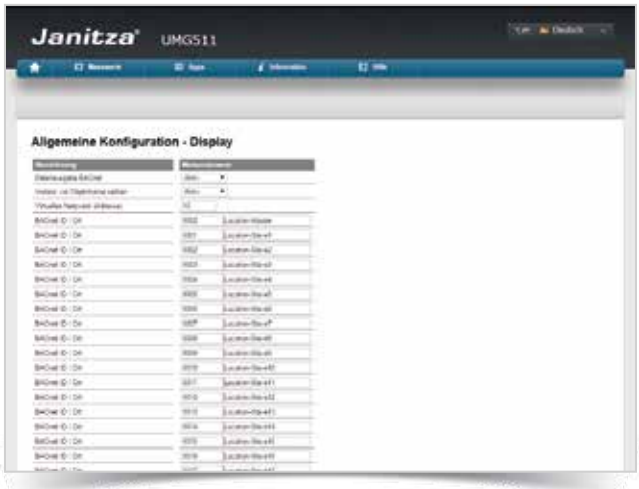

Fig.: General BACnet configuration

APP Push Service 2.0 **Item no. 51.00.238 & 51.00.307**

Applications

- Sending data directly from the device to the energy portal (without additional software)
- The delivery of data is implemented via port 80
- Data can be saved in a MySQL database automatically
- Data can be visualised via a web server by means of a web browser
- An APP must be installed on each device
- Only Jasic-capable devices are supported (UMG 604-PRO / UMG 605-PRO / UMG 508 / UMG 509-PRO / UMG 511 / UMG 512-PRO)
- UMG 96RM-EL with integrated Push App function is supported
- Prodata and UMG 20CM – only via Jasic®-capable devices

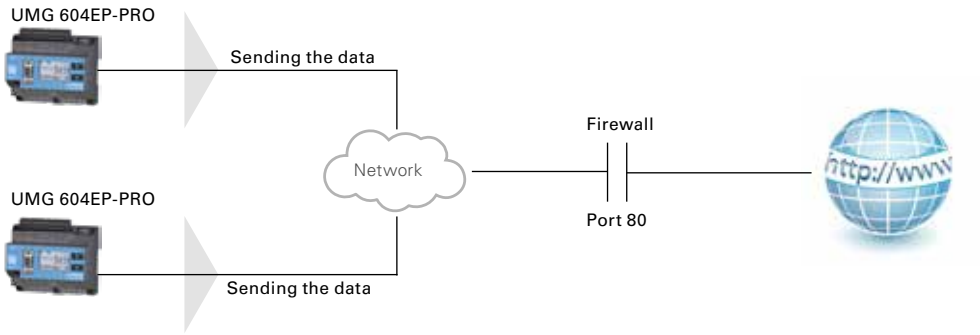

Fig.: Sending the content of the memory for the web application

Properties

- Sending of up to 25 measured values is possible simultaneously
- Delivery of the last mean values from the ring buffer
- APP automatically detects which data in the ring buffer is saved with which averaging time, and presents these for selection
- The measured values to be sent can be selected via the homepage
- Mean values are automatically synchronised to the device time
- The transmission time can be adjusted for the transmission buffer. In the event of the network connection failing, there are no gaps in the data so long as the failure is shorter than the transmission buffer time
- View of a status display on the homepage with the last data transmitted
- Setting of a daily status email to verify a successful sending process (optional)

Advantages

- Less data traffic
- Multiple devices can send data simultaneously
- The transmission string can be easily modified to suit individual requirements
- Thus there is an option to send data from external software
- The sending of data is implemented via port 80 (generally enabled with firewalls)
- Decentralisation and thus less susceptible to interference
- The transmission of data can be implemented as randomly controlled, so that there will be no overlapping
- Simple configuration

Overview of the main features of the APP Push Service 2.0

- Sending of up to 25 measured variables to a "software as a service" program
- Time intervals adjustable via port 80 (via HTTP/Json)
- Configuration implemented via the device website
- APP will be delivered, encrypted, linked to an individual serial number of the UMG device (provision of the serial number necessary)
- Serial number is needed

Item no. 51.00.238 suitable for: UMG 604 / UMG 605 / UMG 508 / UMG 509 / UMG 511 and UMG 512
Item no. 51.00.307 suitable for: UMG 604-PRO / UMG 605-PRO / UMG 509-PRO and UMG 512-PRO

Fig.: Push Service 2.0 UMG 604-PRO

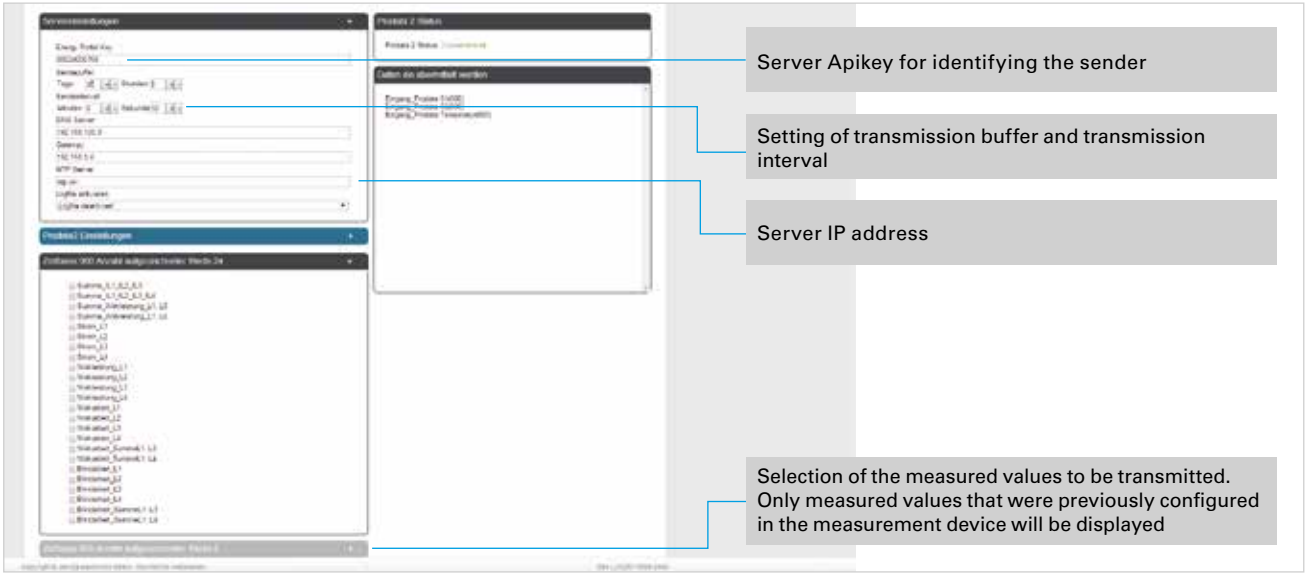

Fig.: Convenient configuration of the APP Push Service 2.0

GPS Sync **Item no. 51.00.291**

- Synchronisation of the device time via digital input
- No NTP server required
- Easy installation
- Accuracy +/-1 s per GPS synchronization
- A GPS receiver (item no. 15.06.240), available as an accessory, is required
- This APP is not required for the UMG 512-PRO because the GPS receiver can be connected to the digital input 1 without an APP on the UMG 512-PRO

Suitable for: UMG 604 / UMG 605 / UMG 508 / UMG 509 / UMG 511 and PRO series

SNMP **Item no. 51.00.310**

- The “Limit value alarm via SNMP” application monitors the settings made on the weg page and in GridVis® and sends an SNMP trap when it is exceeded.
- Freely adjustable trap number
- Until two hosts setable

Suitable for: UMG 604 / UMG 605 / UMG 508 / UMG 509 / UMG 511 / UMG 512 and PRO series

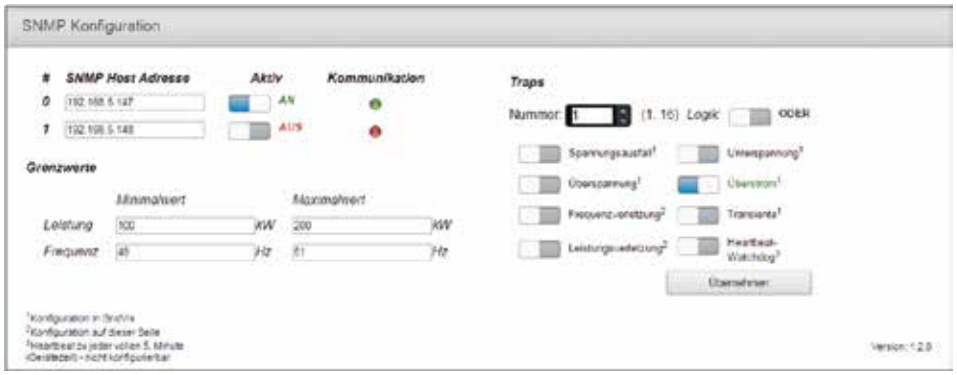

Fig.: Configuration page on an UMG **without** RCM functionality

Fig.: Configuration page on an UMG **with** RCM functionality

APP Mini EnMs **Item no. 51.00.266**

With the “Mini EnMs” APP you can set up a small, local, web-based energy management system for a maximum of 16 Janitza devices without memory. Online and historical data from the master and slave devices are displayed via the web-based user interface. The master device also acts as a data collector for the slave devices.

- Optimised for use on desktops, laptops or tablets
- Select measured variables for the master device and slave devices using drag & drop
- Select the desired time window with the integrated calendar function
- The main variables of the Modbus slaves are stored and displayed on the “main measurement device”
- No external server or software package needed; just a standard browser will suffice
- Maximum of 16 slaves (UMG 103-CBM, UMG 104 or UMG 96RM)
- Memory variables for slave devices
  - Current L1, L2, L3
  - Total effective power
  - Total apparent power
  - Total effective energy
- The master collects the data and presents it on its own device homepage. The APP was developed for small applications where GridVis® ist not being used.
- Serial number is needed

Suitable for: UMG 604-PRO / UMG 605-PRO / UMG 508 / UMG 509-PRO / UMG 511 / UMG 512-PRO

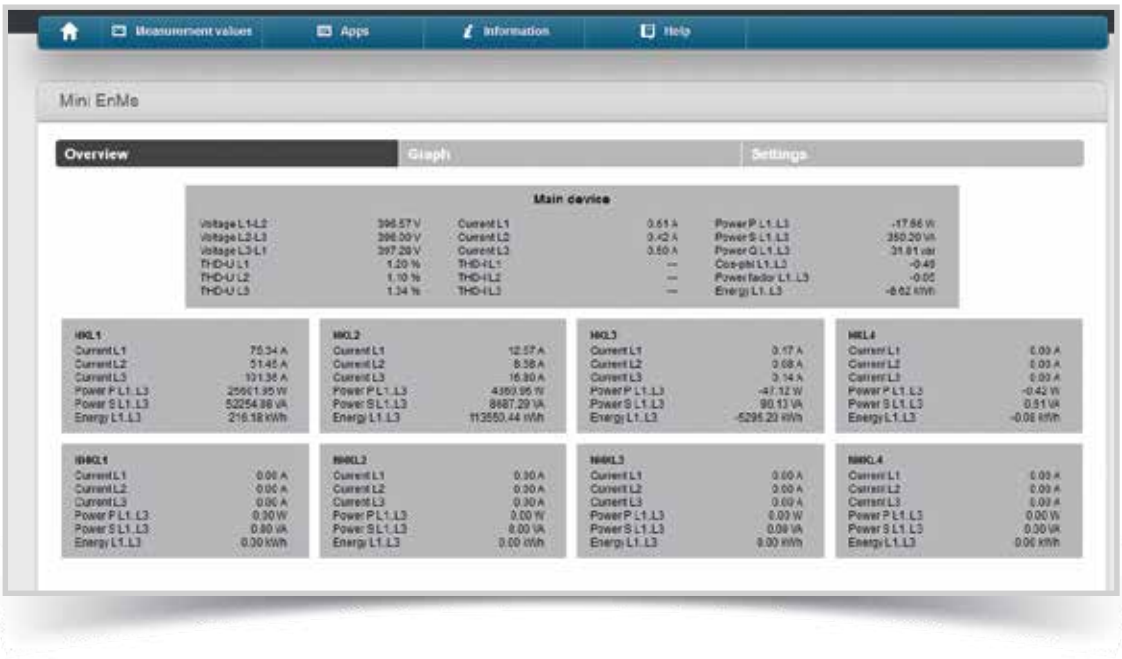

Fig.: APP Mini EnMS

Device homepage

Power management and power quality analysis online

The device-specific homepage for the measuring devices is ideal for users or target groups within a company, who do not wish to install the GridVis® software or do not require it. For access to this, the user simply requires a conventional web browser and an Ethernet connection (or a local patch cable). The screens have been graphically revised and have now been made even more user-friendly. Each measuring device has an integrated web server, which makes a separate, password-protected homepage available. It is possible to operate the device just as comprehensively via this, as via the device display. Furthermore, extensive online and historic measuring data (standard power consumptions), including the power quality analysis, can also be called up. It is even possible to control the measuring device remotely and configure it via the display indications. Because a multitude of PQ measured values can be displayed in addition to the countless standard electrical values, for many users the measuring device homepage constitutes the basic configuration for a monitoring system.

- Access to the powerful meter-homepage via web browser
- No software installation necessary
- Real-time data, historical data etc. directly accessible via the meter home page
- Function extension via APPs possible
- Remote control of device display via homepage
- Password protection possible

Fig.: IEC 61000-2-4 analysis with traffic-light principle

Abb.: Power Quality Statusübersicht

www.Energy-Portal.com

Energy-Portal

The cloud solution for energy management

- Cloud solution especially designed for energy data
- Access from anywhere in the world via the PC or tablet under www.energy-portal.com
- Evaluating and displaying energy data from the UMG measurement devices without requiring an IT infrastructure or expensive software
- The energy data can be pushed directly into the Energy-Portal from one location or from severeal locations.
- Measured values are captured at the same time from various locations
- Saves high acquisition and operating costs for software, database, server, commissioning and software maintenance
- Intuitive operation
- Data is extremely secure (HTTPS)
- Extremely cost-effective and convenient solution
- Lower data volume due to the push function

APP Push Service 2.0 charateristics

- Up to 25 measured values per measuring device can be sent simultaneously
- After installing the APP and configuring the device's memory, the measured values that are to be sent can be selected on the measurement device homepage.
- Up to 50 measurement devices can be managed per account.
- Up to 25 measured values per measurement device can be sent simultaneously
- Mean values ≥ 10 minutes can be selected.
- Up to 100 dashboards are possible per account
- The APP Push Service 2.0 sends the measured data automatically to the "www.energy-portal.com" hosting server in cycles. The APP Push Service 2.0 sends the measured data automatically to the "www.energy-portal.com" hosting server in cycles.
- The measured data can then be evaluated from anywhere in the world using any web browser.
- Transferring the last measured values from the UMG ring buffer
- The APP automatically detects which measured data in the UMG ring buffer is saved with which averaging time, and presents it for selection
- The measured values to be sent can be selected via the UMG measurement device's homepage
- Mean values are automatically synchronised to the device time
- The sending time can be adjusted for the transmission buffer (1 hour – 100 days). If the communication connection fails, there are no gaps in the data as long as the failure is shorter than the transmission buffer time
- The transmission interval is adjustable (1 second – 30 minutes)
- Status indicator on the homepage shows the last measured data transmitted

What does the solution include?

- Server capacities, processing power (IaaS)
- Database storage capacities
- Data backup
- APP Push Service 2.0 to be installed on the UMG measurement devices
- Software as a service (SaaS): Provision of appropriate standardised visualisation software for energy consumption evaluation
- Quick and simple summarization of all energy data from different locations

Fig.: Example of a dashboard with a line chart (load profile) and the power value displayed using an analogue pointer display.

Fig.: Benchmark for the production sites with level displays.
The limit values can be adjusted individually for each of the locations.

Fig.: Heat map (spectral analysis) to determine peak loads that drive costs.
The scroll bar in the chart's header area can be used to adjust the threshold values individually.

Fig.: Dashboard example with two bar charts to compare el. energy values from the current day with the previous day or the current week with the previous week.

Description		Item no.
APP Push Service 2.0[*1] **(per measuring device)**	– Transmits data (up to 25 measuring values from master device to Energy Portal www.energy-portal.com) via Port 80 (HTTP/Json) in adjustable time intervals. – Additionally 12 more metered values are sent (current L1, L2, L3; PF L1, L2, L3; THD L1, L2, L3; apparent power total; active power total and active energy from up to 10 Slave devices). he averaging time is 15 minutes. – The configuration is done on the website of the device. – The counterpart station (SaaS = Software as Services) is not included inside scope of delivery. – The APP is delivered encrypted. (Please provide the serial number) Applicable for master UMGs: 604-PRO / 605-PRO / 508 / 509-PRO / 511 / 512-PRO Applicable for slave: ProData2, UMG 96RM, UMG 96RM-E, UMG 103-CBM, MID energy meters	**51.00.238**
	– Transmits data (up to 25 measuring values from master device to Energy Portal www.energyportal.com) via Port 80 (HTTP/Json) in adjustable time intervals. – Additionally 128 measuring values are sent (current input 1..20, active power 1..20, reactive energy 1..20, voltage L1/N, L2/N, L3/N, frequency up to 2 slave devices UMG 20CM) The averaging time is 15 minutes. – The configuration is done on the website of the device. – The counterpart station (SaaS = Software as Services) is not included inside scope of delivery. – The APP is delivered encrypted. (Please provide the serial number) Applicable for master UMGs: 604-PRO / 605-PRO / 508 / 509-PRO / 511 / 512-PRO Applicable for slave: UMG 20CM	**51.00.285**
Janitza Energy Portal (Software as a Service) hosting solution	– Analysis of energy data via the internet – A Software-as-a-Service contract is concluded between the Contractor (Janitza electronics GmbH) and the Customer. The „Energy Portal Software as a Service“ agreement can be requested by specifying document number 2.353.010.0 – Data archiving: 3 years (optionally 5 years, 51.00.258) – Price per year - up to 50 UMG measuring devices - up to 100 UMG measuring devices - up to 150 UMG measuring devices - up to 200 UMG measuring devices - up to 250 UMG measuring devices - up to 300 UMG measuring devices - from 300 UMG measuring devices	**51.00.255** **51.00.xxx** **51.00.xxx** **51.00.xxx** **51.00.xxx** **51.00.xxx** **51.00.xxx**
Creation of customer-specific dashboards	– Creation of customer-specific dashboards from the available display modules – Linking of the display modules to the measurement variables – The scope of delivery does not include the programming of new display modules – The Contractor will verify in advance whether it is possible to present the DASHBOARD to the Customer's specifications – Price per hour	**51.00.256**
Extension of data archiving duration from 3 to 5 years	– Extension of data archiving duration from 3 to 5 years – Data more than 5 years old will be deleted automatically	**51.00.258**

*[1] The APP Push Service 2.0 is integrated in the firmware of the measuring device UMG 96RM-EL (unencrypted).

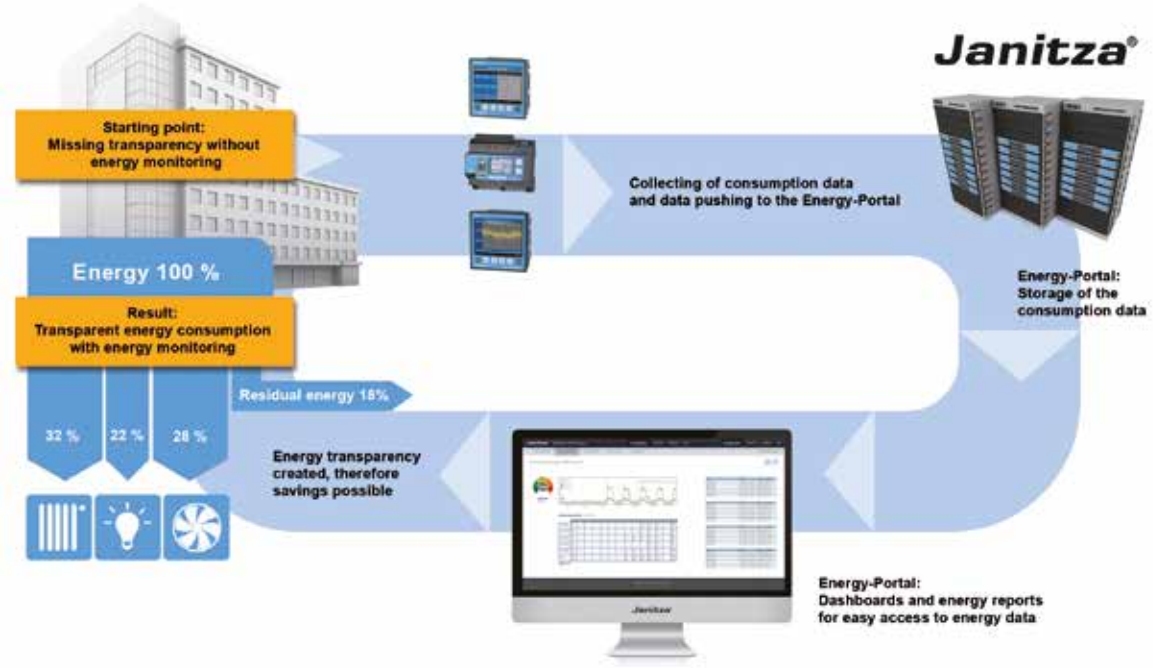

OPC UA SERVER

OPC UA Server

Increase your connectivity

Increase the connectivity of the GridVis® with the new OPC UA server. In addition to the OPC UA client (available as of July 2018, starting with version 7.3), Janitza offers you an OPC UA server. With this expansion, we enter the next step of connectivity within GridVis®. Customers will then be able to exchange all kinds of measuring values, KPIs and any kind of process parameters via OPC UA ITEMS (Tags). The additional installed OPC UA server comes with an embedded driver to communicate directly with GridVis. No programming neccessary. Online values of all metering devices which are connected to GridVis® will be easily available for different kinds of third party software applications as OPC UA Clients, SCADA Systems, ERP System or central building control systems. On top, the OPC UA server has a built-in direct driver connection to KNX, SNMP and BACnet clients. With the new OPC UA server, customers will have an obvious advantage by a minimum of engineering effort. Compared to existing solutions, one can simply integrate complete projects in less than no time instead of a step by step connection to single components.

The OPC UA server is not a part of a GridVis® edition. It can be purchased as an option.

We would be happy to create an offer for you.

Description	Item no.
OPC UA Server 250	**51.00.151**
OPC UA Server 1000	**51.00.152**
OPC UA Server 2500	**51.00.153**
OPC UA Server 10000	**51.00.154**

DATABASE SERVER

Database server

Comprehensive monitoring and analyses require powerful server solutions

- Janitza electronics GmbH offers a powerful server as a complete solution
- Trouble-free and immediate use is guaranteed
- Simple and rapid integration of the pre-configured server into the existing network
- GridVis® software is already installed on the database server
- Available databases: Janitza DB, MS SQL or MySQL
- Application of a powerful tower or rack server from Dell
- The Dell PowerEdge server offers high quality and reliability with maximum expandability
- A RAID-10 system with hot-plug hard drives guarantees a high standard of data security

Fig.: Server (tower)

Guaranteed all-round service

- Access to the database server thanks to Janitza maintenance diagnostics and fault rectification (only with authorisation)
- Rapid diagnostics and rectification of problems possible
- Highest level of security: Use of common remote maintenance solutions with three-stage encryption per industry standards

Fig.: Server (rack)

For larger projects we currently recommend the following configuration:

- Current Intel processor
- 16 GB RAM
- RAID controller
- RAID 10 with 4 hard drives, 1 TB capacity each
- DVD-ROM drive
- Windows 2008 Server with 5 CALs, 64 Bit (German or English version)
- Installation of GridVis® software and the database driver for SQL servers
- MySQL / MS SQL databases should be provided by the client
- The integration of the server into the company's own network must be implemented by the customer's own administration

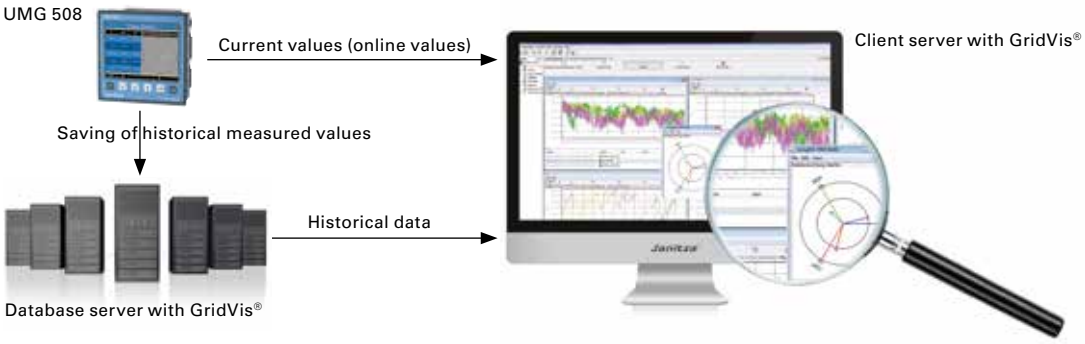

Fig.: The UMG 508, for example, currently has 6 communication ports. Of these, two are designed as gateways (port 8000) for downstream RS485 devices.

Areas of application

- With extensive monitoring systems with a large number of measurement devices
- For applications that require a high degree of data security and maximum performance
- With companies whose systems must be scalable and expandable

Application

- GridVis® runs as a service on the server
- Log-in of a user not required for automatic data logging
- For measured value analysis the client computer accesses the server directly via the network
- Access to measurement data within the database by any number of client systems possible
- Display of online measurement values dependent of the number of ports per device, i.e. visualisation of historical data via the database, online measurement values available direct from the UMG device

Product overview		
Description		**Item no.**
Server (tower)	• Current Intel processor • 16 GB RAM • RAID controller • RAID 10 with 4 hard drives, 1 TB capacity each • DVD-ROM drive • Incl. mouse and keyboard with german layout • Windows 2012 Server with 5 CALs, 64 Bit (German or English version) **Note:** • GridVis® software and database driver for SQL server • MySQL / MS SQL databases should be provided by the customer • The integration of the server into the company's own network must be implemented by the customer's own administration • Warranty from Dell GmbH	**15.06.352** (Windows version, German) **15.06.353** (Windows version, English)
Server (rack)	• Current Intel processor • 16 GB RAM • RAID controller • RAID 10 with 4 hard drives, 1 TB capacity each • DVD-ROM drive • Windows 2012 Server with 5 CALs, 64 Bit (German or English version) **Note:** • GridVis® software and database driver for SQL server • MySQL / MS SQL databases should be provided by the customer • The integration of the server into the company's own network must be implemented by the customer's own administration • Warranty from Dell GmbH	**15.06.354** (Windows version, German) **15.06.355** (Windows version, English)
Setup package 1 for MS SQL	• Install hard drives • Install operating system • RAID configuration (RAID 10) • Install updates • Install MS SQL Server* • Install GridVis®	**51.01.018**
Setup package 2 for My SQL	• Install hard drives • Install operating system • RAID configuration (RAID 10) • Install updates • Install MySQL Server* • Install GridVis®	**51.01.019**
Setup package 3 for JanDB	• Install hard drives • Install operating system • RAID configuration (RAID 10) • Install updates • Install JanDB • Install GridVis® • Install RTP user	**51.01.023**

* The MS SQL or MySQL database should be provided by the customer. GridVis® software and database drivers are separate items. The integration of the server into the company's own network must be implemented by the customer's own administration. Hardware warranty from Dell GmbH.

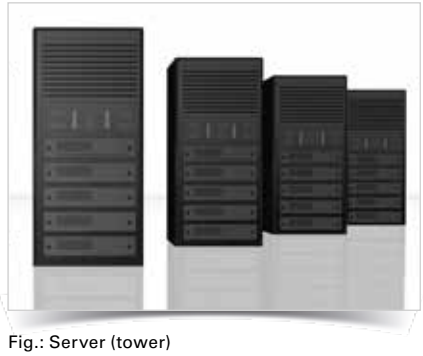

Fig.: Server (tower)

Fig.: Server (rack)

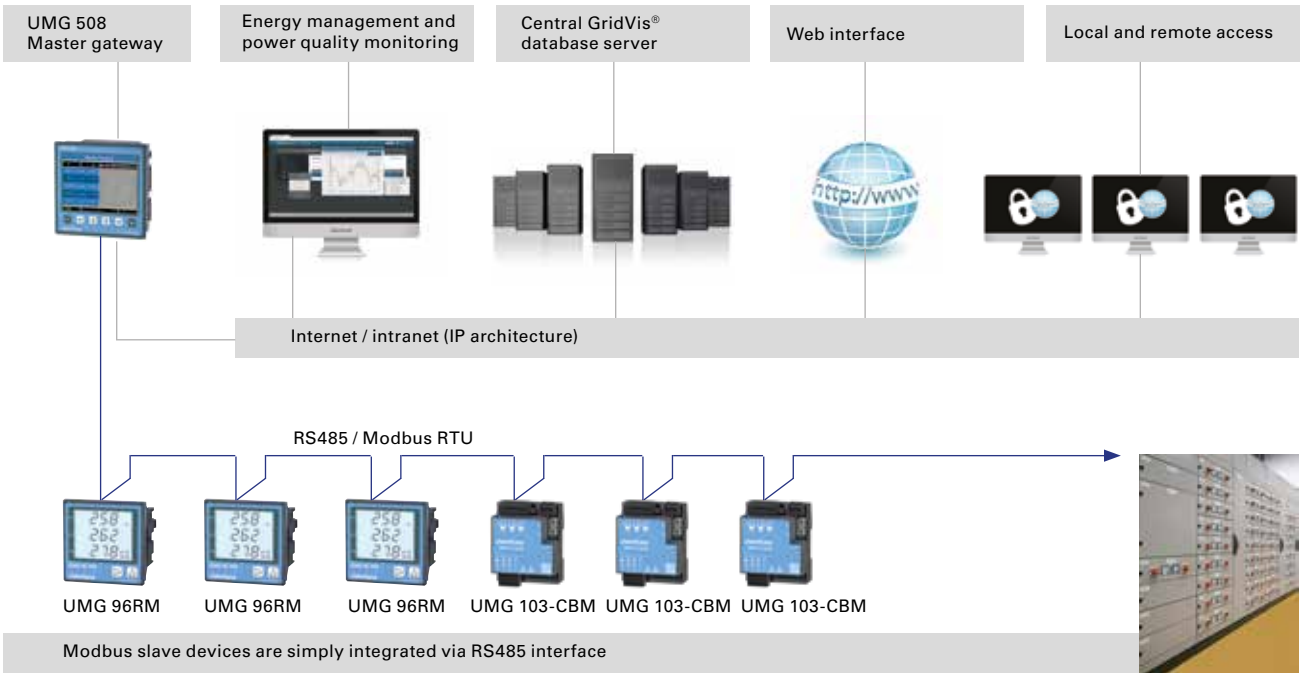

Fig.: Master-Slave communication architecture